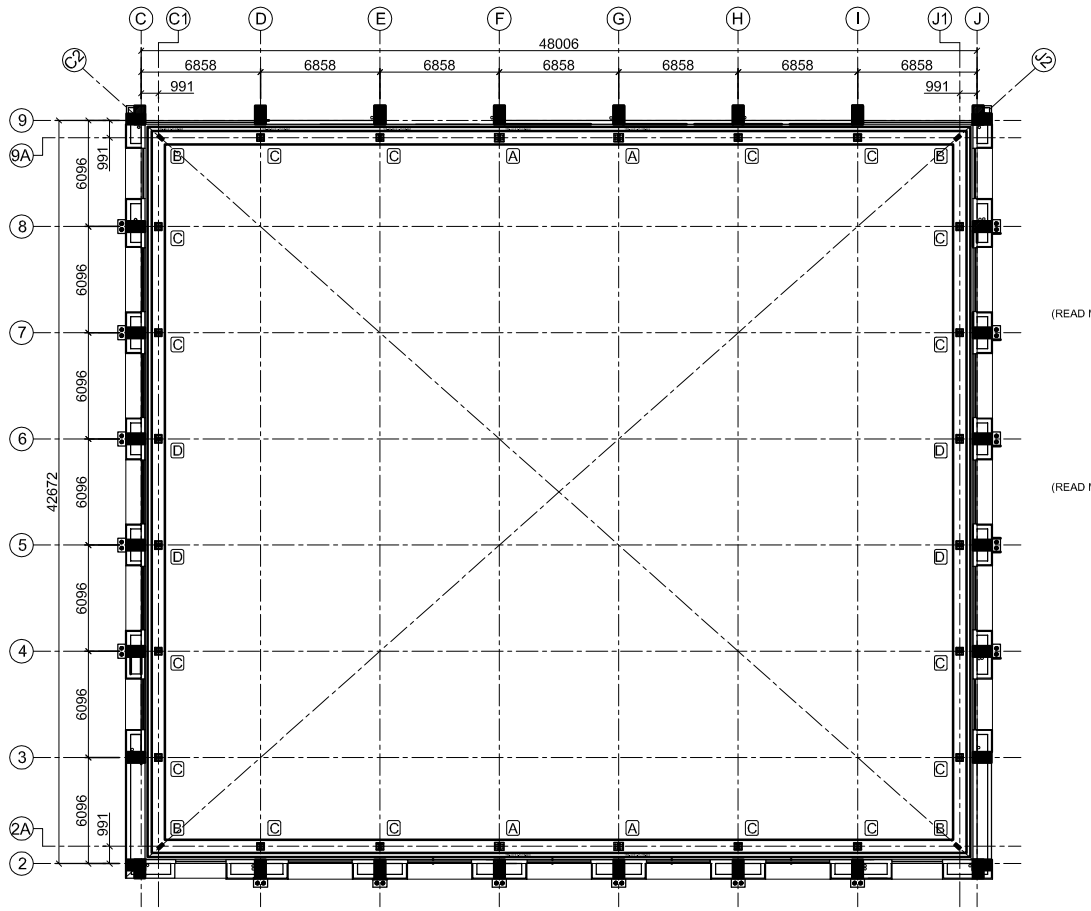

ANCHOR BOLT LAYOUT PLAN

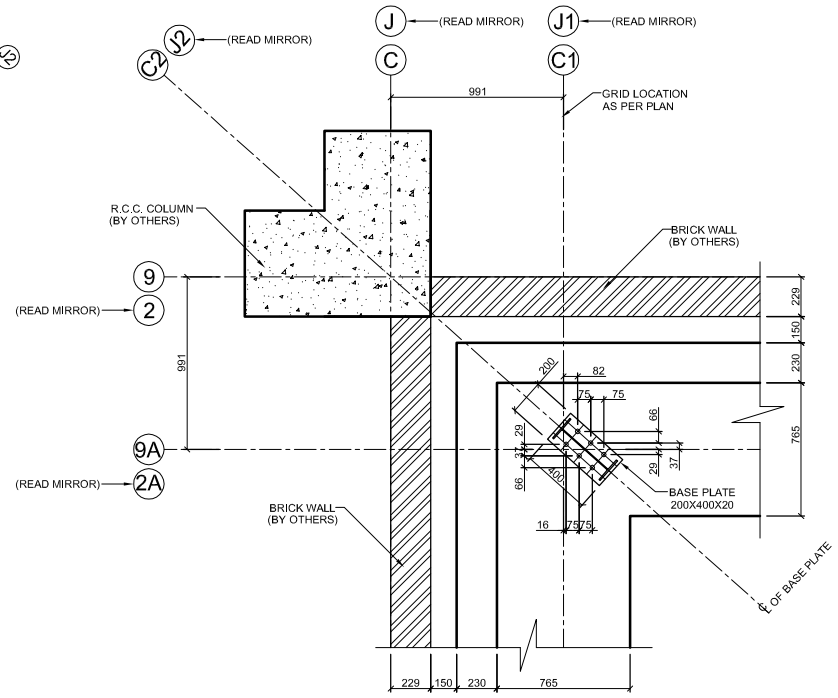

DETAIL OF BASE PLATE-B
6 NOS. 20Ø ANCHOR BOLTS

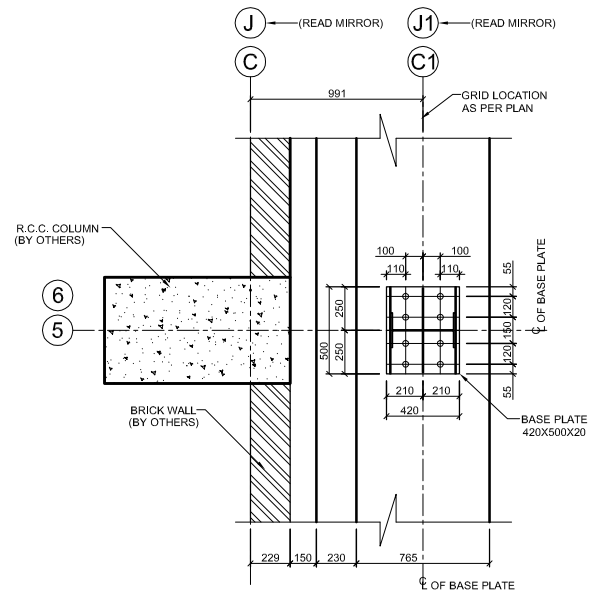

DETAIL OF BASE PLATE-D
8 NOS. 28Ø ANCHOR BOLTS

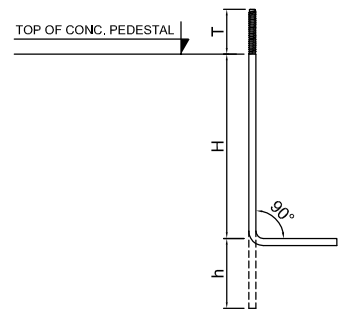

ANCHOR BOLT SCHEDULE

BOLT DESCRIPTION	USAGE	DIA.	H	h	T
AB 36X1800	MAIN FRAME	36	1350	250	200
AB 28X1375	MAIN FRAME	28	1000	200	175
AB 24X1225	MAIN FRAME	24	900	150	175
AB 20X1050	MAIN FRAME	20	750	150	150

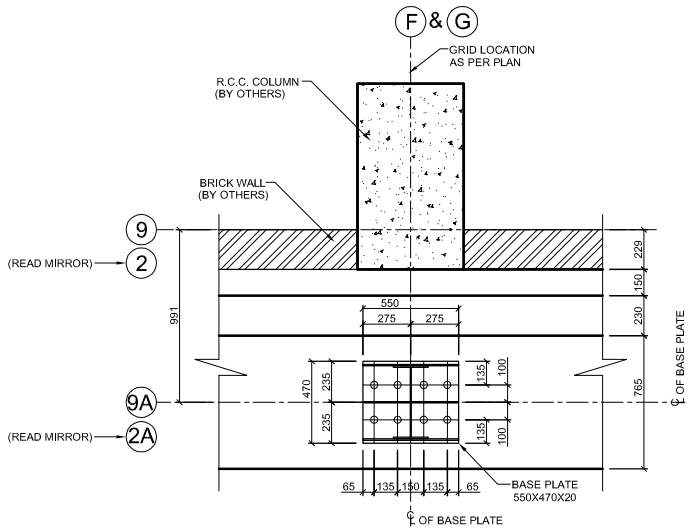

DETAIL OF BASE PLATE-A
8 NOS. 36Ø ANCHOR BOLTS

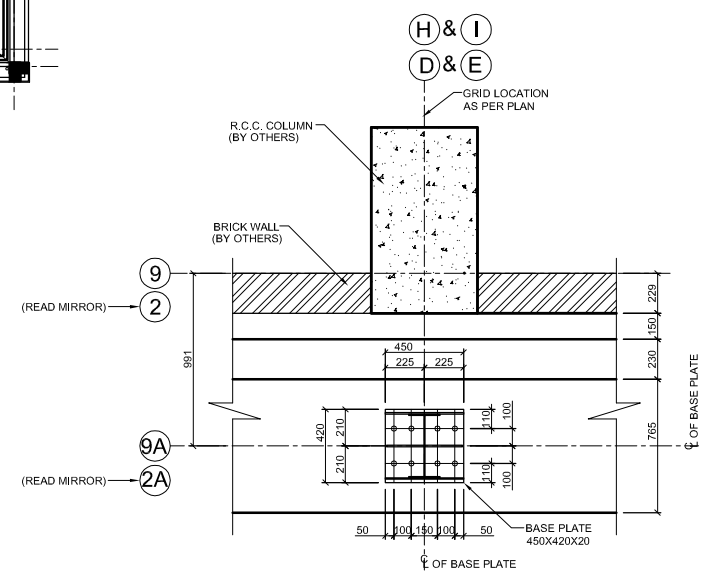

DETAIL OF BASE PLATE-C
8 NOS. 24Ø ANCHOR BOLTS

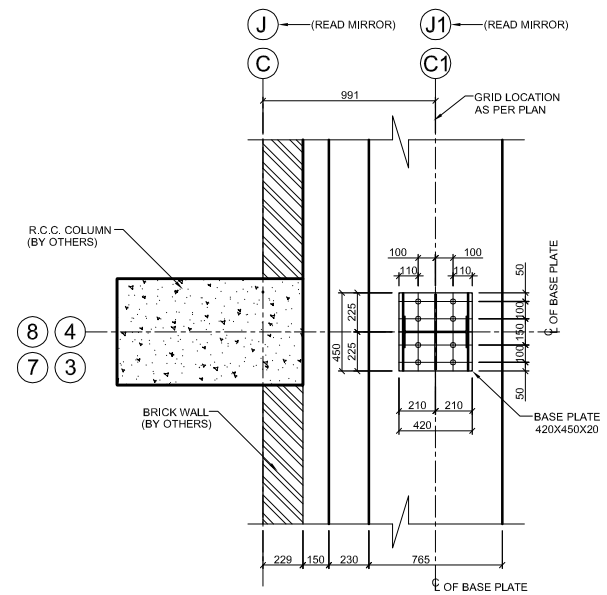

DETAIL OF BASE PLATE-C
8 NOS. 24Ø ANCHOR BOLTS

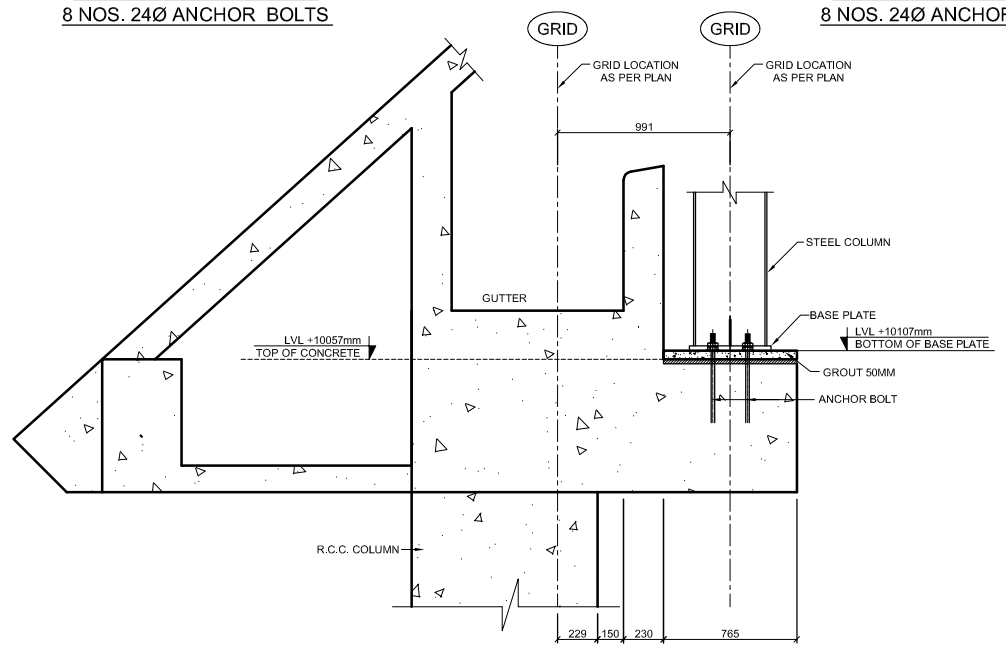

(TYPICAL SECTION PINNED BASE)

IMPORTANT NOTES

1. Anchor bolts should be set accurately and held in position by template before casting to the given dimensions and projection , with maximum deviationof 5mm.
   Anchor bolt threads should be protected during concreting operation , or thoroughly cleaned after pouring. All templates should be removed after the anchor bolts are set in concrete to full strength.
2. All anchor bolt diameters are in millimetres. Anchor bolt projection must be according to design and threads to be clean.
3. The installation of Anchor Bolts and embedded items must be done in accordance with the Code of Standard Practice for Steel Buildings of AISC Section 7.
   Anchor Bolts and Foundation Bolts shall be set for maximum allowable tolerances as follows :
   a) 3 mm center to center or any two bolts within an Anchor Bolt group.
   b) 6 mm center to center of adjacent Anchor Bolt groups.
   c) Elevation of the top of Anchor Bolts +/- 12 mm.
   d) Maximum accumulation of 6 mm per 30 mtrs. along the established column line of multiple anchor bolt groups but not to exceed a total of 25 mm.
   e) 6 mm from the center of any anchor bolt group to the established column line through that group.
   f) the tolerances of paragraphs A and B apply to offset dimensions shown on the plans, measured parallel and perpendicular to the nearest established column line for individual column shown on the plans to be offset from established column line.
4. Anchor bolts shall be set perpendicular to the theoretical bearing surface unless shown otherwise.
5. Anchor bolts should be embeded in concrete so that its threaded portion should start from the top level of concrete pedestal
6. All Dimensions are in mm
7. Anchor Bolt steel grade FY = 250MPa
8. ANCHOR BOLT LOCATIONS HAVE TO BE VERIFIED BY COMPETENT AUTHORITY OF M/S JPF TO ENSURE ACCURACY AT SITE.
9. LEVELS AS MARKED IN DETAILS TO BE CONFIRMED BY CLIENT/CONSULTANT
10. GRADE OF CONCRETE SHALL BE OF MIN. M25 U.N.O.
11. SIZES OF THE PEDESTAL SHOULD BE 50 MM MORE ON EITHER SIDE OF DIMENSION OF BASE PLATE
12. ALL R.C.C. & BRICK WORK IS NOT IN OUR SCOPE

Project:
PRE ENGINEERING BUILDING

Drawing Title:
ANCHOR BOLTS PLAN AND DETAILS

Client:
M/S BANQUET HALL

JINDAL PREFAB PVT. LTD.®
Manufacturers of Pre-Engineered Buildings with Various Skins Systems, PUF Insulated Panels & Decking.
DESIGN DIVISION
JINDAL PREFAB PVT. LTD.
Central Marketing Office 705, SEC-15, PART-II, GURGAON-122001(HR) &
Works:-Khasra No. 125, Industrial Space, Binola Industrial Area, Bhora Kalan, Gurgaon (HR) -122001 (India)

Drawn by:		Scale:	NTS	Date: 13/02/2015	
Checked by:	Str.:	Project No:	sheet no	Drawing No:	Revision:
Approved by:		JPF/P-47	1 OF 1	BH/AB-01	0

NOTE:-
1. All rights reserved. This drawing contains proprietary information which is protected by copyright. No part of this drawing may be reproduced, translated in computer language, or transmitted in any form whatsoever without the prior written consent of JINDAL PREFAB PVT. LTD.