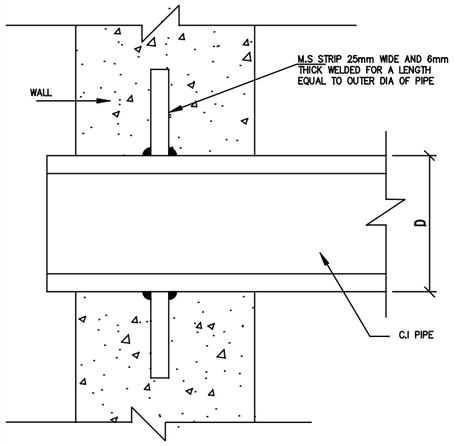

DETAIL OF PUDDLE FLANGE
(80 dia & above)

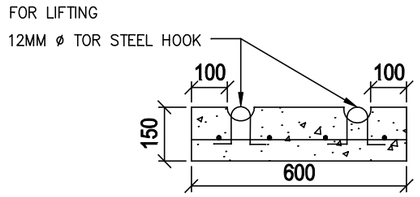

SECTION C–C

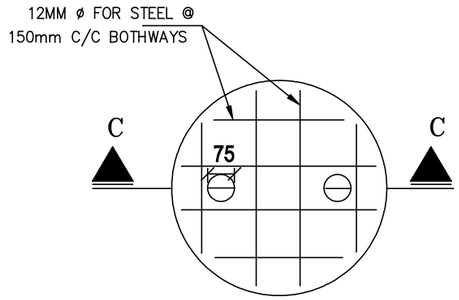

PLAN

DETAIL OF I.C. COVER

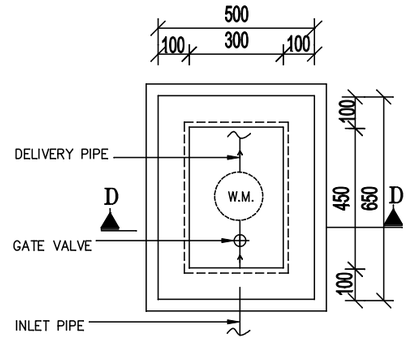

PLAN

DETAIL OF WATER METER

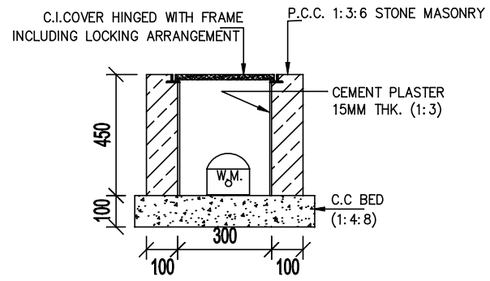

SECTION D–D

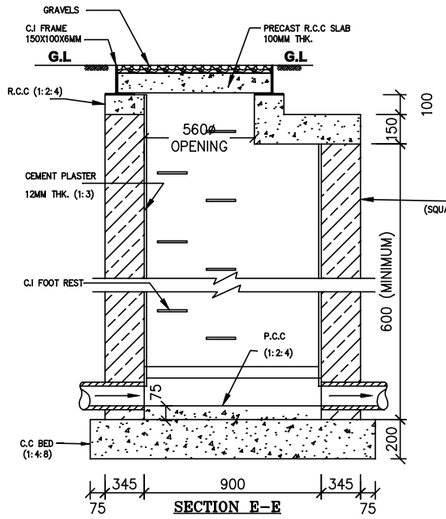

SECTION E–E

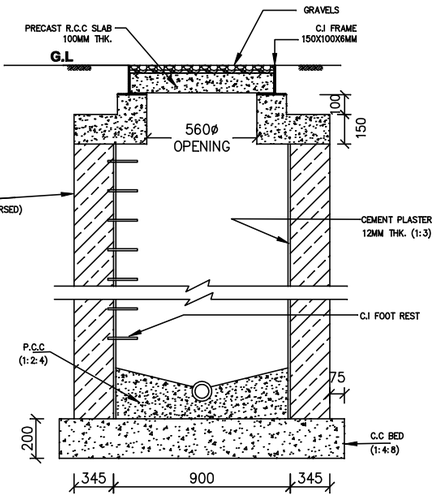

SECTION F–F

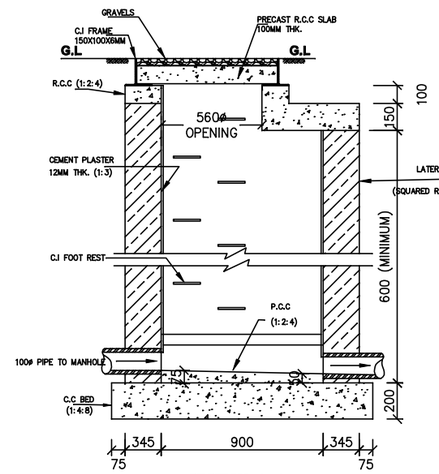

SECTION A–A

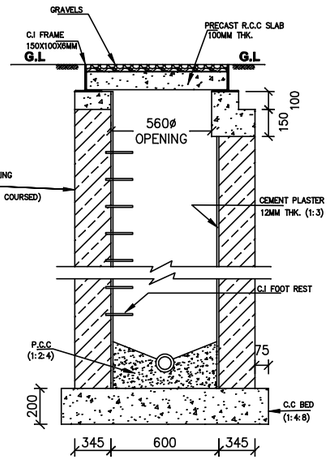

SECTION B–B

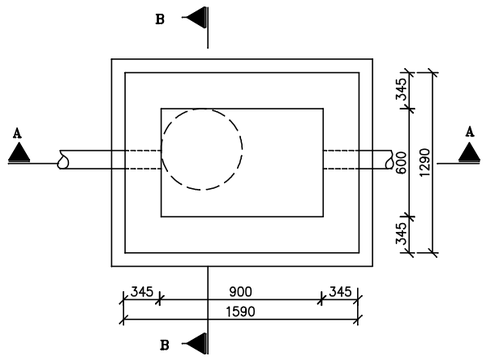

PLAN OF I.C. 900x600

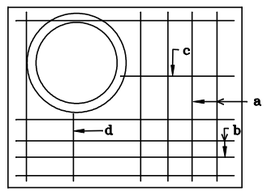

I.C. SLAB

BAR BENDING SCHEDULE SLAB COVER			
MARK	DIA IN MM	NO	LENGTH IN MM
a	12	5	900
b	12	5	1100
c	12	1	600
d	12	1	300

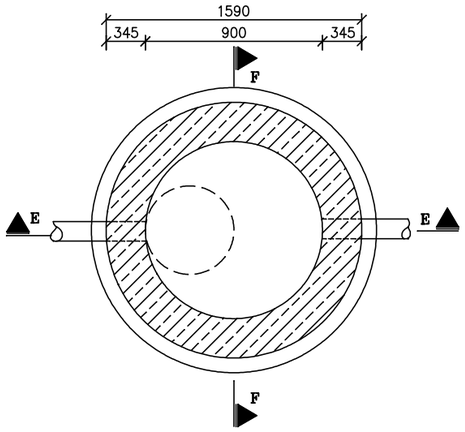

PLAN OF I.C. 900ø

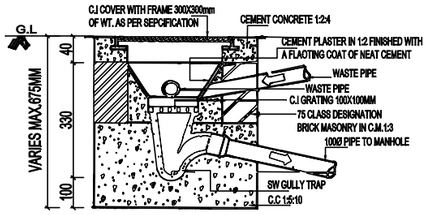

SECTION A–A

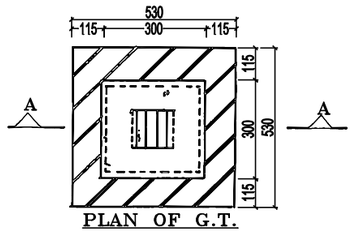

PLAN OF G.T.

BEAUTIFICATION OF DURGIANA MANDIR COMPLEX AMRITSAR

(PROPOSED PARKING)

REFERANCE DRGS. :

NO.	DATE	TITLE	REMARKS

REVISIONS

GENERAL NOTES:

1. The contractor/site engineer is to verify and relate all dimensions on site before execution of work.Change, If any is brought to the notice of architect immediately.
2. All dimension are to be read and not to be scaled.
3. All architectural and other drawings must be co-related by the contractor before execution of work.
4. Entire construction work is to be executed as per C.P.W.D. and B.I.S. Specifications
5. For exact location of all RWP and other pipes in each duct refer seperate details in P.H. drawings.
6. It is The Responsibility of the Owner to employ a Qualified & Experienced site engineer to supervise & monitor on Daily basis the quality & accuracy of work as per the Drawing & specifications.
7. M/S Architscts Consortium's role is only limited to provide The Architectural and Structural Drawings.
8. Before start of Construction It is the Responsibility of the Owner to comply & apply for all statutory clearanies.

NOTE:
THIS DRAWING AND DESIGN IS THE COPYRIGHT OF M/S ARCHITECTS CONSORTIUM, MOHALL NO PART OF THIS DRAWING IS TO BE COPIED OR REPRODUCED IN ANY MANNER WITHOUT THE WRITTEN PERMISSION OF M/S ARCHITECTS CONSORTIUM.

OWNER :

PUBLIC HEALTH CONSULTANT :-

HARBANS SINGH
Public Health Engineer (Rtd.)

ARCHITECTS CONSORTIUM
ARCHITECTS, PLANNERS, ENGINEERS,
INTERIOR & INDUSTRIAL DESIGNERS
S.C.O - 42, PHASE-3B2, MOHALI (Pb.).
☎ - 0172-5093132; 🖷 - 0172-4643132;
📱 - 98154 43132.
E-mail - info@audvivek.com
Web site :- www.audvivek.com

DRAWING TITLE	DRAWING NO. :
I.C., M.H., & G.T. DETAILS	PH- 01(A)

PROJ.NO. :	FILE NAME		DRAWN BY
967			
DATE	SCALE	PLOT SCALE	CHKD. BY
20.04.2013			