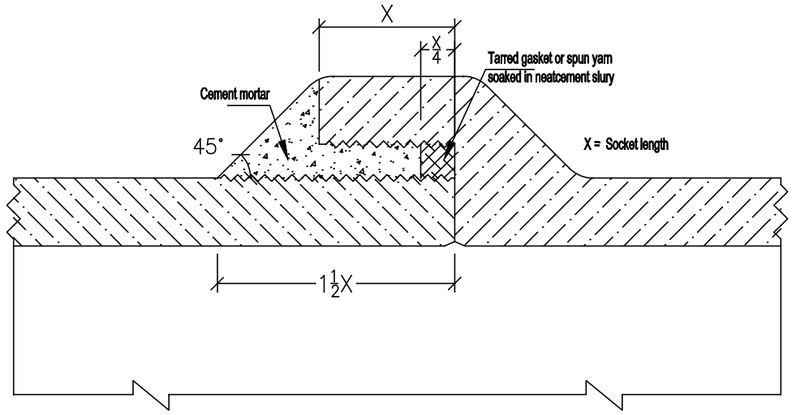

TYPICAL DETAIL OF CEMENT JOINTS FOR GLAZED STONEWARE PIPE

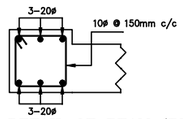

DETAIL OF BEAM (BI)

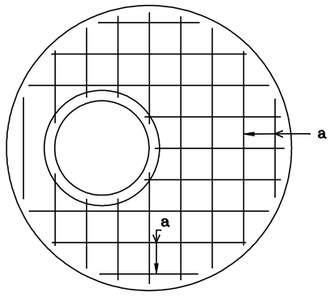

I.C. SLAB

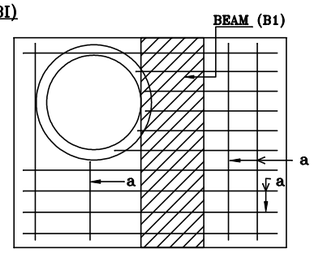

I.C. SLAB

BAR BENDING SCHEDULE SLAB COVER		
MARK	DIA IN MM	THICKNESS
a	12ø @ 125mm c/c top & bottom	230mm

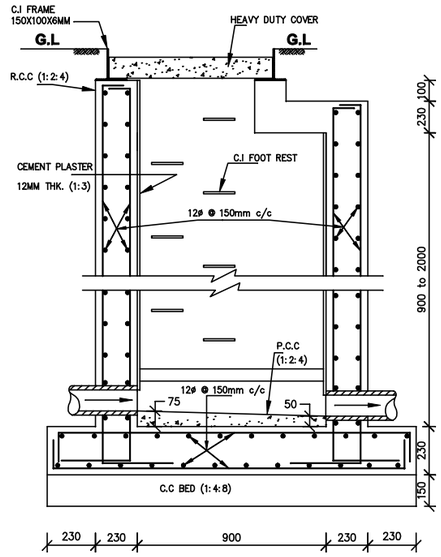

SECTION A-A

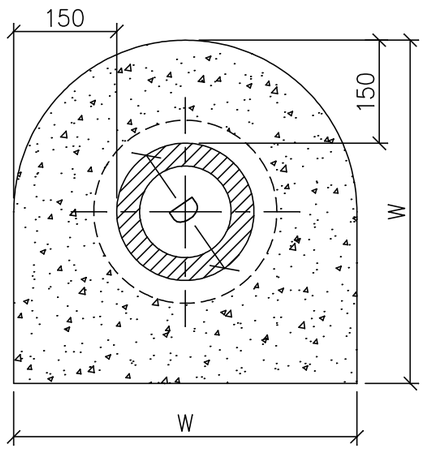

W = D+300, where
D = external dia of pipe

TYPICAL ENCASING DETAIL OF PIPE

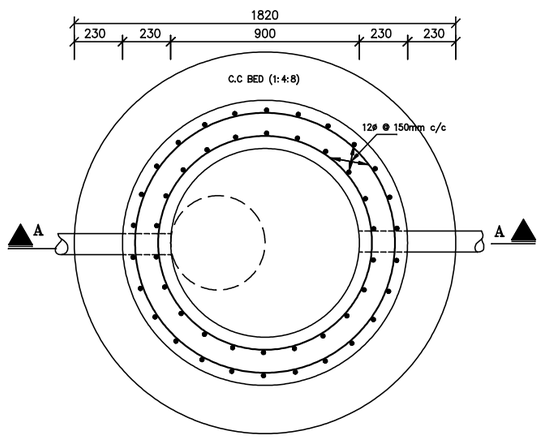

PLAN OF I.C. 900ø

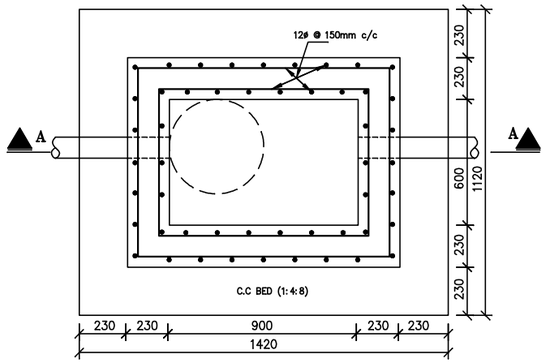

PLAN OF I.C. 900x600

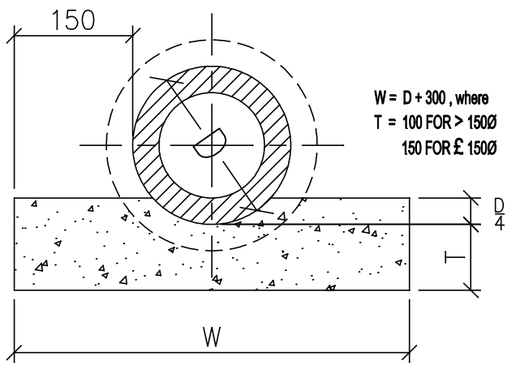

TYPICAL BEDDING DETAIL OF PIPE

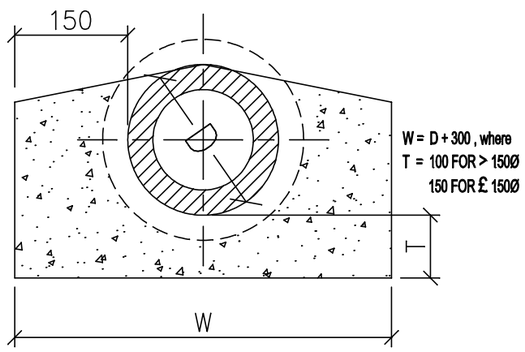

TYPICAL HAUNCHING DETAIL OF PIPE

BEAUTIFICATION OF DURGIANA MANDIR COMPLEX AMRITSAR

(PROPOSED PARKING)

SPECIFICATIONS

NO.	DATE	TITLE	REMARKS

REVISIONS

GENERAL NOTES:

1. The contractor/site engineer is to verify and relate all dimensions on site before execution of work.Change, if any is brought to the notice of architect immediately.
2. All dimension are to be read and not to be scaled.
3. All architectural and other drawings must be co-related by the contractor before execution of work.
4. Entire construction work is to be executed as per C.P.W.D. and B.I.S. Specifications
5. For exact location of all RWP and other pipes in each duct refer seperate details in PH. drawings.
6. It is The Responsibility of the Owner to employ a Qualified & Experienced site engineer to supervise & monitor on Daily basis the quality & accuracy of work as per the Drawing & specifications.
7. M/S Architects Consortium's role is only limited to provide The Architectural and Structural Drawings.
8. Before start of Construction It is the Responsibility of the Owner to comply & apply for all statutory clearanies.

NOTE:

THIS DRAWING AND DESIGN IS THE COPYRIGHT OF M/S ARCHITECTS CONSORTIUM, MOHALI. NO PART OF THIS DRAWING IS TO BE COPIED OR REPRODUCED IN ANY MANNER WITHOUT THE WRITTEN PERMISSION OF M/S ARCHITECTS CONSORTIUM.

OWNER :

PUBLIC HEALTH CONSULTANT :-

HARBANS SINGH
Public Health Engineer (Rtd.)

ARCHITECTS CONSORTIUM
ARCHITECTS, PLANNERS, ENGINEERS, INTERIOR & INDUSTRIAL DESIGNERS
S.C.O - 42, PHASE-3B2, MOHALI. (Pb.).
☎ - 0172-5093132; 🖷 - 0172-4643132;
📱 - 98154 43132.
E-mail - info@sadvivek.com
Web site :- www.sadvivek.com

DRAWING TITLE
TYPICAL PIPE ENCASING DETAIL & DETAIL OF MANHOLES UNDER ROADS

DRAWING NO. :-
PH- 01

PROJ.NO. :- 967	FILE NAME		DRAWN BY
DATE 20.04.2013	SCALE:	PLOT SCALE	CHKD. BY