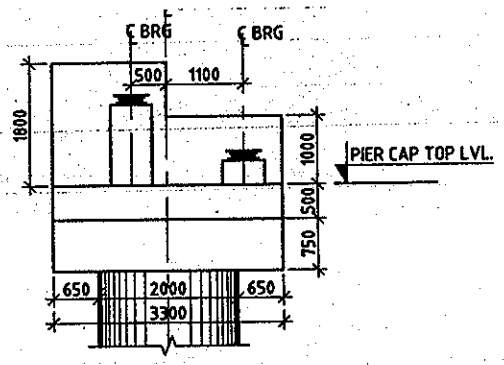

ELEVATION ALONG L-L AXIS
(SHOWING PIER DIMENSIONS)
(SCALE 1:75)

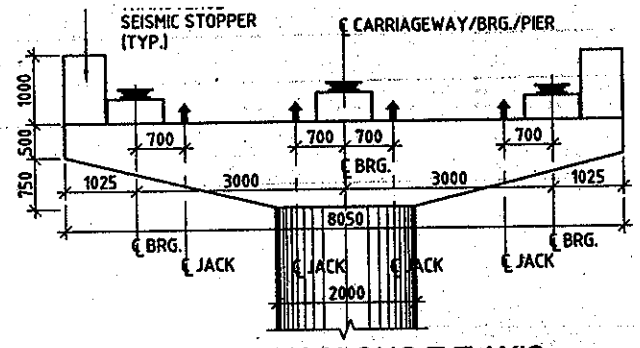

ELEVATION ALONG T-T AXIS
(SHOWING PIER DIMENSIONS)
(SCALE 1:75)

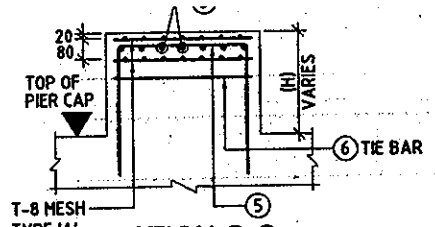

SECTION G-G
HEIGHT OF PEDESTAL (H)
(SCALE 1:20)

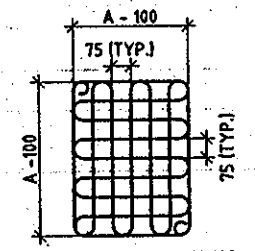

T-8 MESH REINF. TYPE - 'A'
(UNDER BEARING)
(SCALE 1:20)

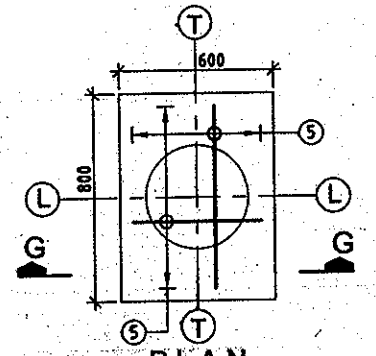

PLAN
(DETAILS OF PEDESTAL)
(SCALE 1:20)

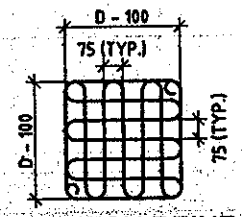

T-8 MESH REINF. TYPE - 'B'
(UNDER JACK)
(SCALE 1:20)

NOTES:

1. ALL DIMENSIONS ARE IN mm AND LEVELS IN METRES, UNLESS OTHERWISE MENTIONED. ONLY WRITTEN DIMENSIONS ARE TO BE FOLLOWED. NO DIMENSION IS TO BE SCALED.
2. CONCRETE SHALL BE DESIGN MIX WITH A MINIMUM 28 DAYS CHARACTERISTIC STRENGTH 150mm CUBES AS FOLLOWS:-
   PIER ----------M35
   PIER CAP ----------M35
3. CLEAR COVER TO OUTER MOST STEEL SHALL BE AS FOLLOWS.
   (i) FOR SUBSTRUCTURE ------- 50mm
   (ii) FOR FOUNDATION -------- 75mm
4. TMT HIGH YIELD STRENGTH DEFORMED BARS SHALL BE OF GRADE DESIGNATION Fe-415 CONFORMING TO IS:1786 SHALL ONLY BE USED.
5. MINIMUM BOND LENGTH SHALL BE 42 x DIA OF BAR.
6. MINIMUM LAP LENGTH FOR REINFORCEMENT BAR SHALL BE 72 x DIA OF BAR. LAPS SHALL BE STAGGERED AND NOT MORE THAN 50% OF BARS SHALL BE LAPPED AT ANY ONE SECTION.
7. IN PIER SHAFT T-10 OPEN LINKS (OR S LOOPS) WITH HOOK PLACED AROUND THE VERTICAL BARS ARE PLACED AT THE RATE OF 4 LINKS IN ONE SQUARE METER.
8. LL REPRESENTS LONGITUDINAL AXIS OF BRIDGE AND TT REPRESENTS TRANSVERSE AXIS OF BRIDGE.
9. A IS THE DIMENSIONS OF THE BEARINGS WHICH IS TO BE FURNISHED BY THE MANUFACTURER.
10. D = DIA OF JACK.

REFERENCE DRAWINGS:-
i) 1213/SMEC/LUDHIANA/22+005/G-01 (SHEET 1 OF 6 TO 6 OF 6)
ii) 1213/SMEC/LUDHIANA/22+005/E-06 (SHEET 1 OF 2)

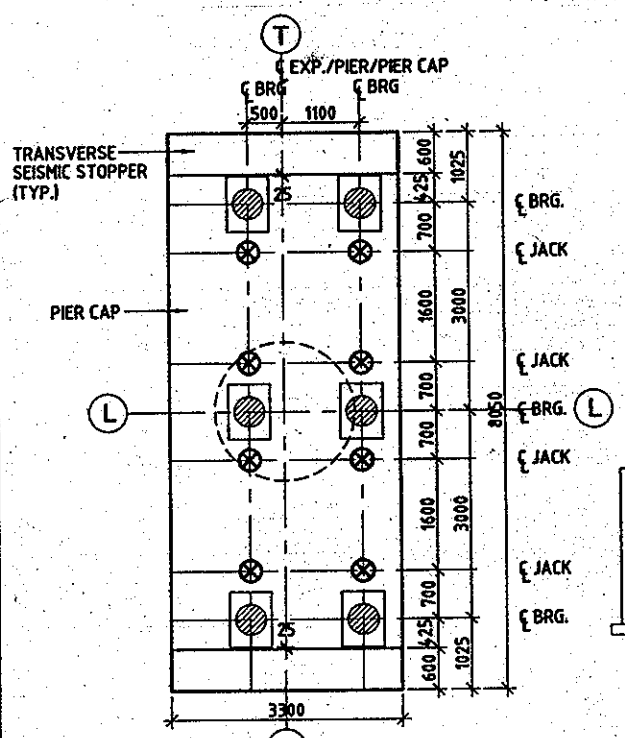

PLAN AT PIER CAP TOP
(SHOWING DIMENSIONS)
(SCALE 1:75)

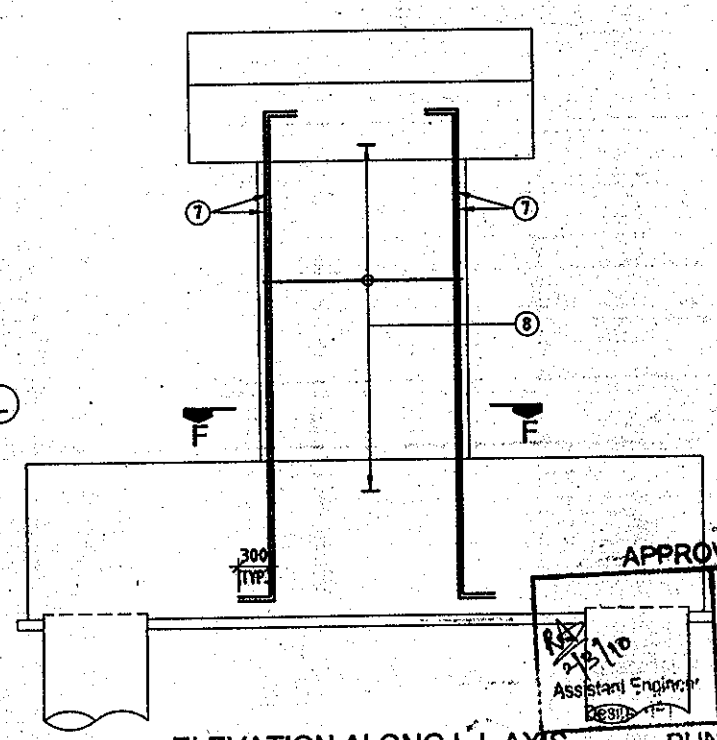

ELEVATION ALONG L-L AXIS
(SHOWING PIER REINFORCEMENT)
(SCALE 1:50)

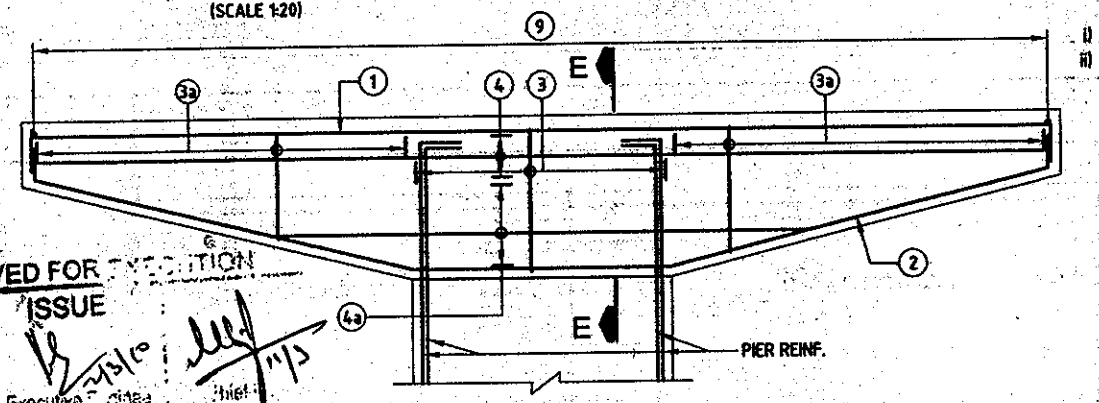

SECTION D-D
(SCALE 1:40)

APPROVED FOR EXECUTION
ISSUE
Assistant Engineer
Executive Engineer
Chief
PUNJAB P.W.D. (B & R)

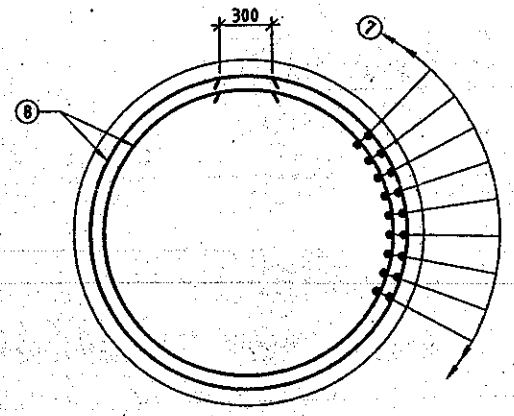

SECTION F-F
(SCALE 1:30)

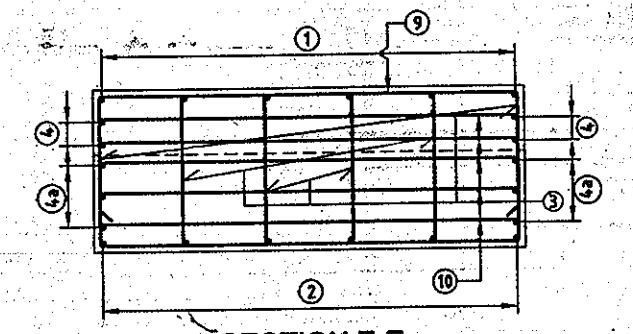

SECTION E-E
(SCALE 1:40)

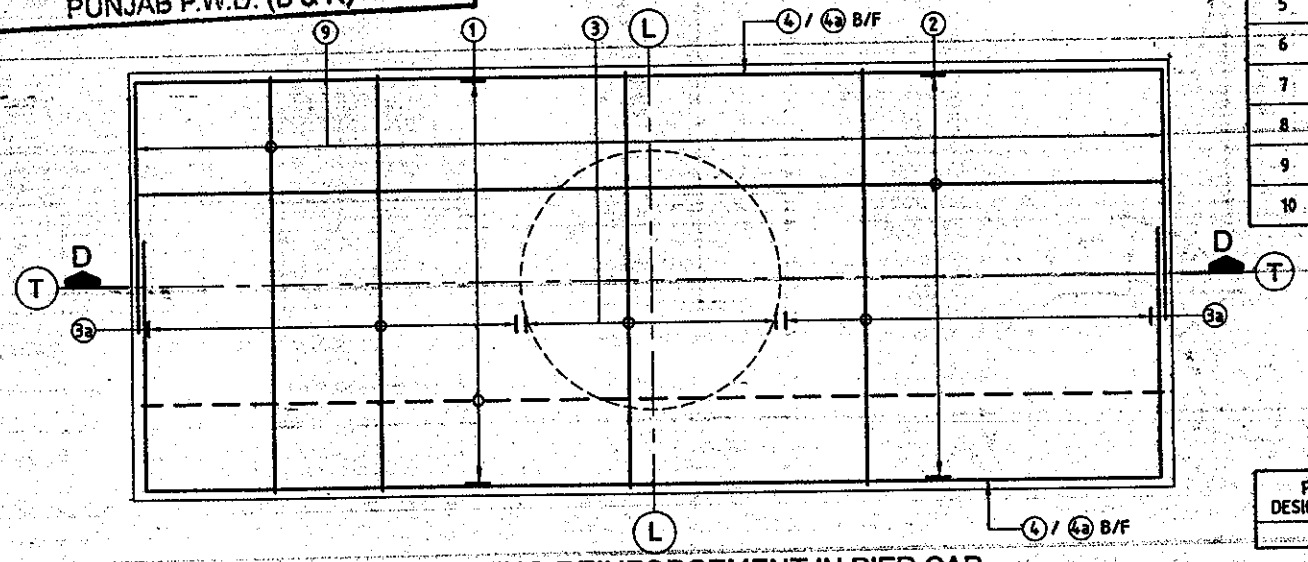

PLAN SHOWING REINFORCEMENT IN PIER CAP
(SCALE 1:40)

REINFORCEMENT DETAIL:

BAR MKD.	DIA (mm)	SPACING/Nos.	SHAPE
1	32	37 Nos.	
2	16	37 Nos.	
3	16	150	6 LEGGED
3a	16	75	8 LEGGED
4	20	2Nos.	
4a	20	3Nos.	
5	16	75	
6	16	150	
7	32	100 Nos.(2x50)	
8	12	125	
9	25	67 Nos.	
10	16	5 LAYER	5 LEGGED

LEGENDS:
- BAR ON TOP FACE
- BAR ON BOTTOM FACE

LEVEL CHART FOR PIER

PIER DESIGNATION	FORMATION LEVEL	PIER CAP TOP LEVEL	BED LEVEL
P7	255.150	251.905	246.518

THIS DRAWING HAS NOT BEEN PUBLISHED AND IS THE SOLE PROPERTY OF SMEC INDIA PVT. LTD. AND IS ISSUED TO THE PARTY FOR THE SPECIFIC PURPOSE AS STATED IN THE AGREEMENT AND IT SHALL NOT BE REPRODUCED, COPIED LENT OR OTHERWISE DISPOSED OFF DIRECTLY OR INDIRECTLY, NOR USED FOR ANY OTHER PURPOSE OTHER THAN FOR WHICH IT IS FURNISHED.

CLIENT: PIDB PUNJAB INFRASTRUCTURE DEVELOPMENT BOARD

CONSULTANT: SMEC (India) Pvt. Ltd. DLF BUILDING No 8, C TOWER, 5th FLOOR, CYBER CITY, PHASE-II,GURGAON, HARYANA, INDIA -122 002 Tel : 0124-4380042, 4501100

PROJECT TITLE: PREPARATION OF DETAILED PROJECT REPORT FOR UPGRADATION OF SOUTHERN BYE-PASS LUDHIANA

REV	DATE	DRAWN	DESIGN	CHECKED	APPROVED	DETAILS OF REVISION
R1	28/08/2009	MKS	VNM	VNM	S LAHIRI	REVISED AS PER PB.PWD COMMENTS
R0	22/05/2009	MKS	VNM	VNM	S LAHIRI	FIRST ISSUE

SCALE: AS SHOWN
SHEET SIZE: A2

DETAILED PROJECT REPORT
DIMENSIONAL & REINFT. DETAILS OF PILE, PILE CAP, PIER & PIER CAP
(SHEET 2 OF 2)

DPR DRW 1213/SMEC/LUDHIANA/22+005/E-06 R1

CAD File Ref: H:\Structure\1213\FINAL DPR\Revised Drawings R2 (Feb 10)\Bridge CH. 22+005\FLYOVER CH.22+005 E-06.dwg