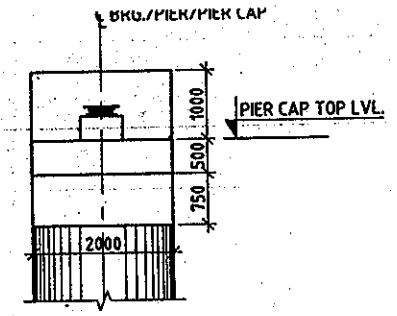

ELEVATION ALONG L-L AXIS
(SHOWING PIER DIMENSIONS)
(SCALE 1:75)

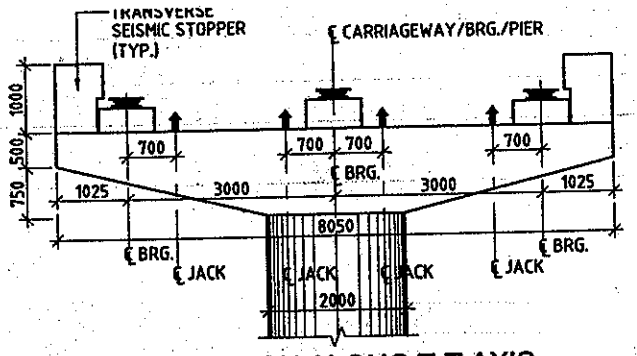

ELEVATION ALONG T-T AXIS
(SHOWING PIER DIMENSIONS)
(SCALE 1:75)

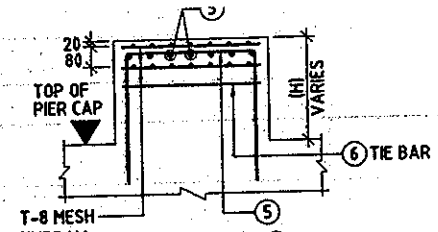

SECTION G-G
HEIGHT OF PEDESTAL (H)
(SCALE 1:20)

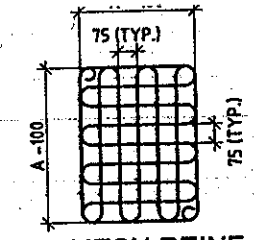

T-8 MESH REINF. TYPE - 'A'
(UNDER BEARING)
(SCALE 1:20)

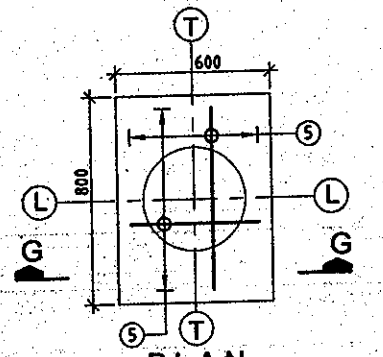

PLAN
(DETAILS OF PEDESTAL)
(SCALE 1:20)

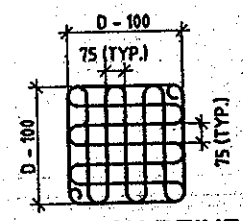

T-8 MESH REINF. TYPE - 'B'
(UNDER JACK)
(SCALE 1:20)

1. ALL DIMENSIONS ARE IN mm AND LEVELS IN METRES, UNLESS OTHERWISE MENTIONED. ONLY WRITTEN DIMENSIONS ARE TO BE FOLLOWED. NO DIMENSION IS TO BE SCALED.
2. CONCRETE SHALL BE DESIGN MIX WITH A MINIMUM 28 DAYS CHARACTERISTIC STRENGTH 150mm CUBES AS FOLLOWS:-
   PIER ----------M35
   PIER CAP ----------M35
3. CLEAR COVER TO OUTER MOST STEEL SHALL BE AS FOLLOWS.
   (i) FOR SUBSTRUCTURE ------ 50mm
   (ii) FOR FOUNDATION -------- 75mm
4. TMT HIGH YIELD STRENGTH DEFORMED BARS SHALL BE OF GRADE DESIGNATION Fe-415 CONFORMING TO IS:1786 SHALL ONLY BE USED.
5. MINIMUM BOND LENGTH SHALL BE 42 x DIA OF BAR.
6. MINIMUM LAP LENGTH FOR REINFORCEMENT BAR SHALL BE 72 x DIA OF BAR. LAPS SHALL BE STAGGERED AND NOT MORE THAN 50% OF BARS SHALL BE LAPPED AT ANY ONE SECTION.
7. IN PIER SHAFT T-10 OPEN LINKS (OR S LOOPS) WITH HOOK PLACED AROUND THE VERTICAL BARS ARE PLACED AT THE RATE OF 4 LINKS IN ONE SQUARE METER.
8. LL REPRESENTS LONGITUDINAL AXIS OF BRIDGE AND TT REPRESENTS TRANSVERSE AXIS OF BRIDGE.
9. A IS THE DIMENSIONS OF THE BEARINGS WHICH IS TO BE FURNISHED BY THE MANUFACTURER.
10. D = DIA OF JACK.

REFERENCE DRAWINGS:-
i) 1213/SMEC/LUDHIANA/21+100/G-01 (SHEET 1 OF 7 TO 7 OF 7)
ii) 1213/SMEC/LUDHIANA/21+100/E-03 (SHEET 1 OF 2)

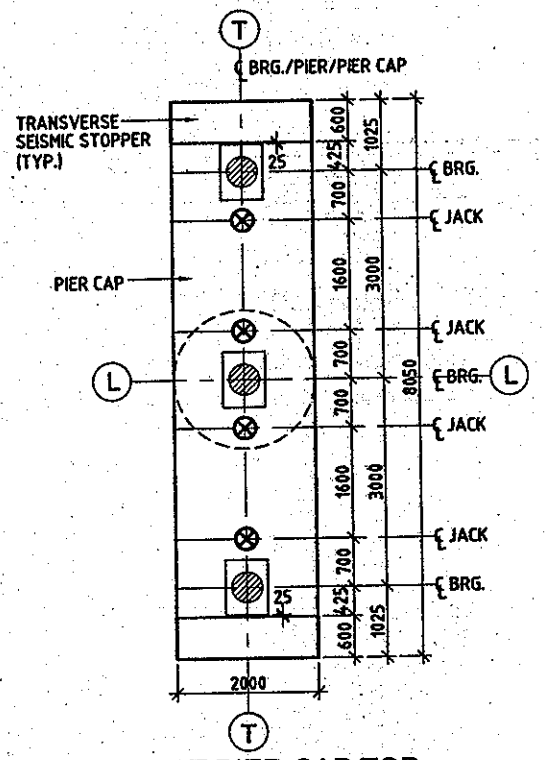

PLAN AT PIER CAP TOP
(SHOWING DIMENSIONS)
(SCALE 1:75)

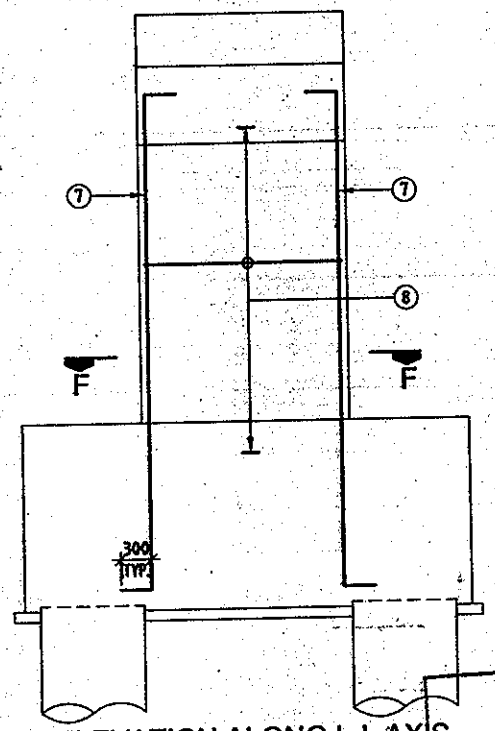

ELEVATION ALONG L-L AXIS
(SHOWING PIER REINFORCEMENT)
(SCALE 1:50)

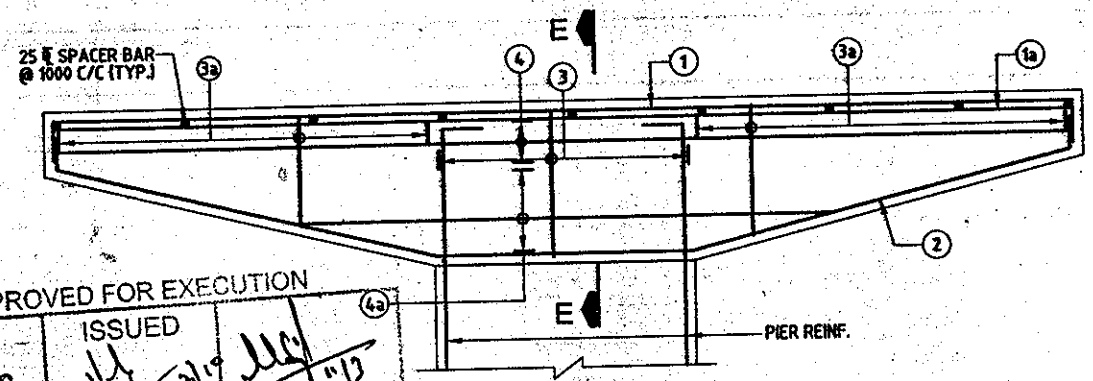

SECTION D-D
(SCALE 1:40)

APPROVED FOR EXECUTION
ISSUED
Assistant Engineer Design (IP) — Executive Engineer Design (IP) — Chief Engineer (IP)
PUNJAB P.W.D. (B & R)

REINFORCEMENT DETAIL:

BAR MKD.	DIA (mm)	SPACING/Nos.	SHAPE
1	32	14 Nos.	
1a	32	14 Nos.	
2	16	27 Nos.	
3	16	150	
3a	16	150	9 LEGGED
4	12	2Nos.	
4a	12	3Nos.	
5	12	75	
6	12	150	
7	25	60 Nos.	
8	12	125	

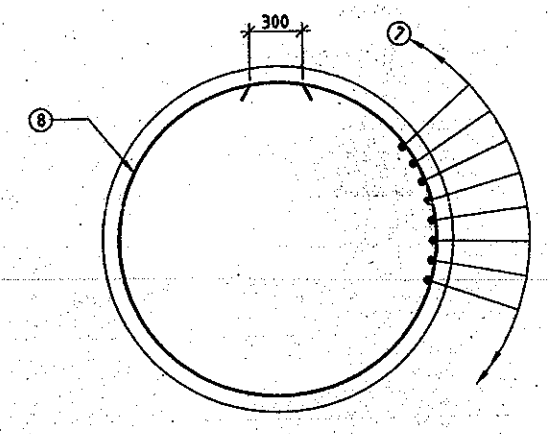

SECTION F-F
(SCALE 1:30)

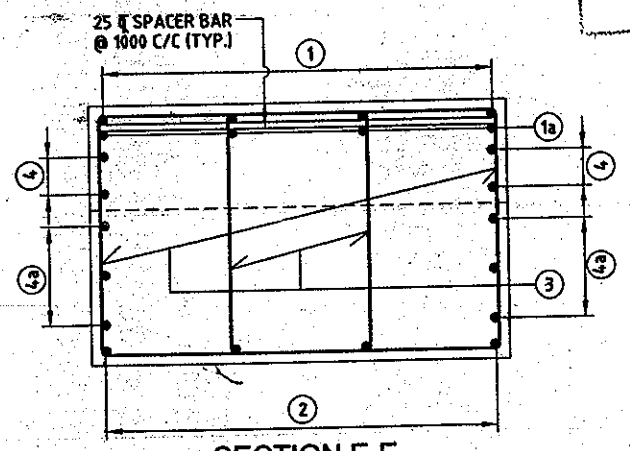

SECTION E-E
(SCALE 1:25)

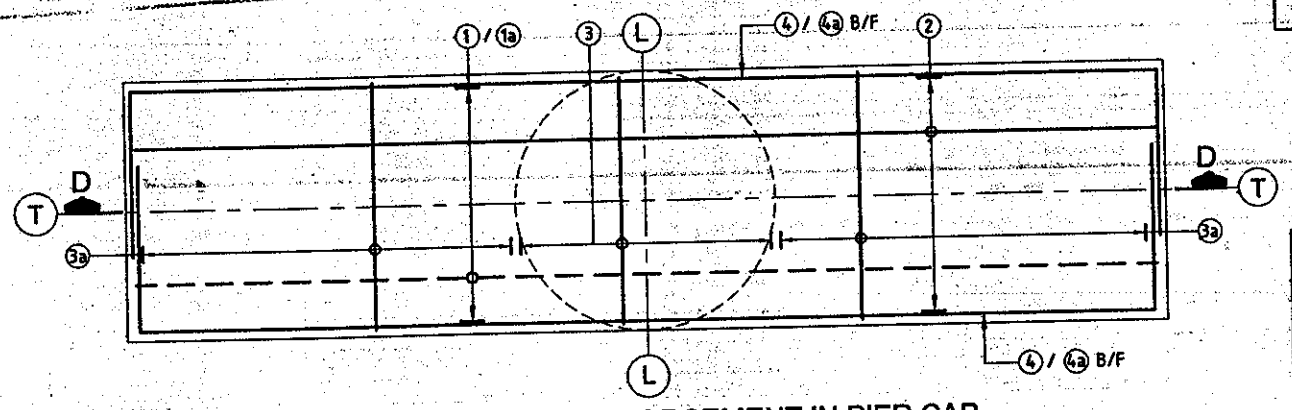

PLAN SHOWING REINFORCEMENT IN PIER CAP
(SCALE 1:40)

LEGENDS:
- BAR ON TOP FACE
- BAR ON BOTTOM FACE

LEVELS CHART FOR PIER

PIER DESIGNATION	FORMATION LEVELS	PIER CAP TOP LEVELS	BED LEVELS
P2	252.770	250.355	246.703
P3	253.430	251.015	246.723
P6	255.410	252.995	246.818
P7	256.070	253.655	246.832
P12	256.070	253.655	246.604
P13	255.410	252.995	246.572
P16	253.430	251.015	246.580
P17	252.770	250.355	246.590

THIS DRAWING HAS NOT BEEN PUBLISHED AND IS THE SOLE PROPERTY OF SMEC INDIA PVT. LTD. AND IS ISSUED TO THE PARTY FOR THE SPECIFIC PURPOSE AS STATED IN THE AGREEMENT AND IT SHALL NOT BE REPRODUCED, COPIED LENT OR OTHERWISE DISPOSED OFF DIRECTLY OR INDIRECTLY, NOR USED FOR ANY OTHER PURPOSE OTHER THAN FOR WHICH IT IS FURNISHED.

CLIENT: PIDB — PUNJAB INFRASTRUCTURE DEVELOPMENT BOARD

CONSULTANT: SMEC (India) Pvt. Ltd.
DLF BUILDING No 8, C TOWER, 5th FLOOR, CYBER CITY, PHASE-II,GURGAON, HARYANA, INDIA-122 002
Tel : 0124-4380042, 4501100

PROJECT TITLE: PREPARATION OF DETAILED PROJECT REPORT FOR UPGRADATION OF SOUTHERN BYE-PASS LUDHIANA

REV	DATE	DRAWN	DESIGN	CHECKED	APPROVED	DETAILS OF REVISION
R0	25/05/2009	MKS	VNM	VNM	S SHIRI	FIRST ISSUE

SCALE: AS SHOWN
SHEET SIZE: A2

DETAILED PROJECT REPORT
DIMENSIONAL & REINFT. DETAILS OF PILE, PILE CAP, PIER & PIER CAP
(SHEET 2 OF 2)

DPR | DRW | 1213/SMEC/LUDHIANA/21+100/E-03 | R0

CAD File Ref: H:\Structure\1213\FINAL DPR\Revised Drawings R2 (Feb 10)\Bridge CH. 21+100\ROB CH.21+100 E-03.dwg

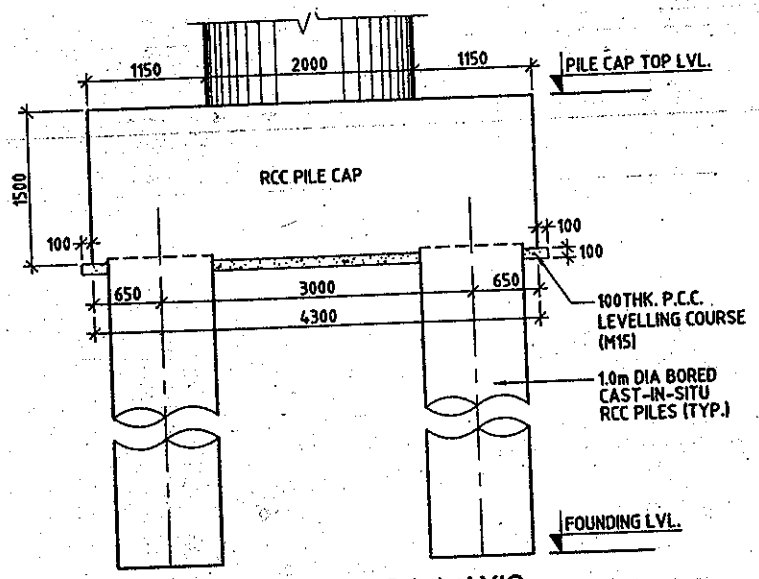

ELEVATION ALONG L-L AXIS
(SCALE 1:50)

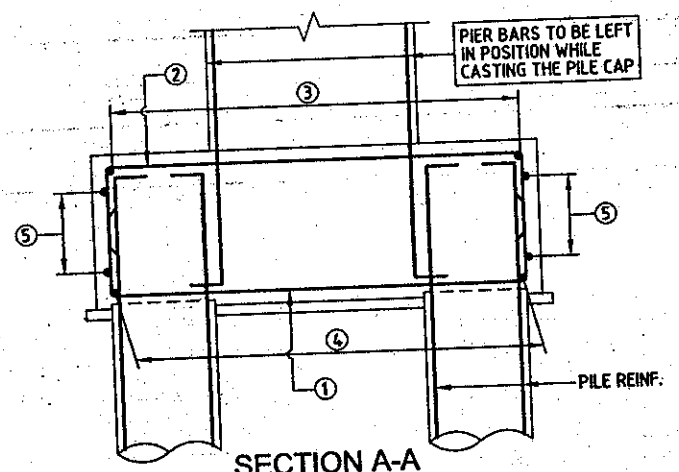

SECTION A-A
(SCALE 1:50)

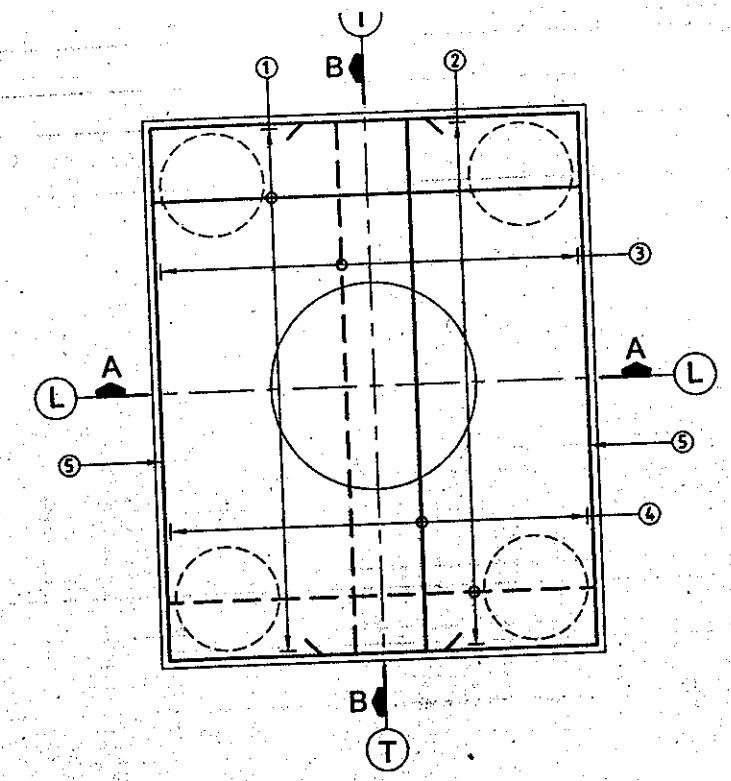

PLAN
(SHOWING PILE CAP REINFORCEMENT)
(SCALE 1:50)

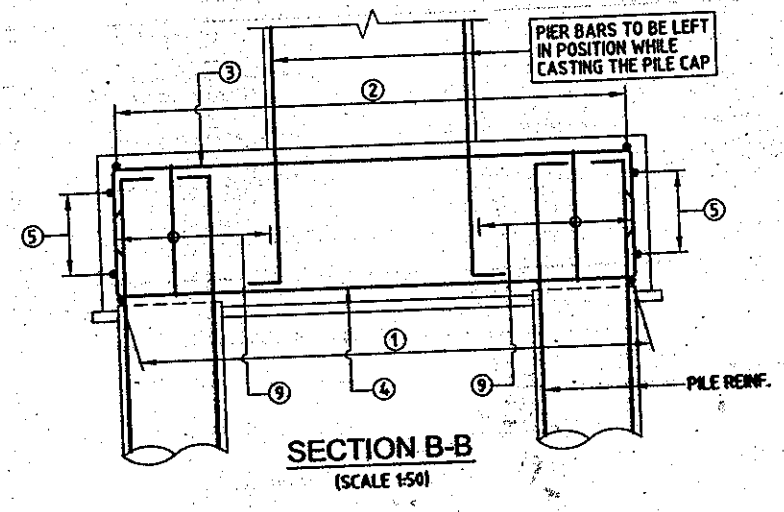

SECTION B-B
(SCALE 1:50)

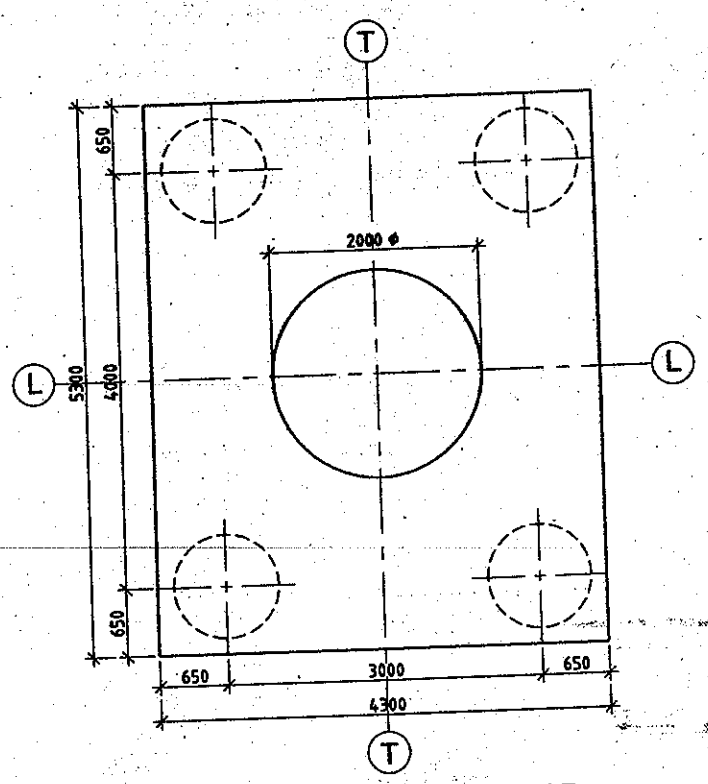

PLAN AT TOP OF PILE CAP
(SHOWING DIMENSIONS)
(SCALE 1:50)

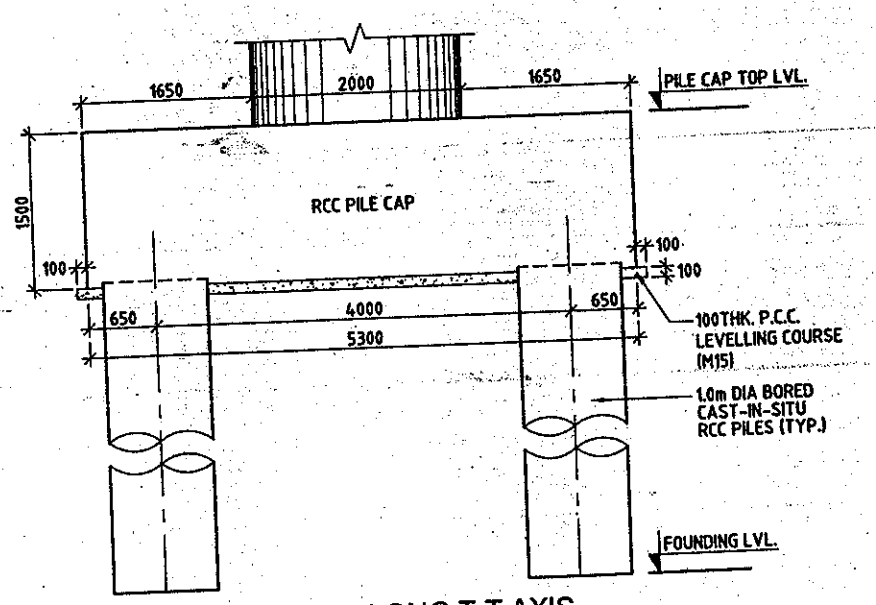

ELEVATION ALONG T-T AXIS
(SCALE 1:50)

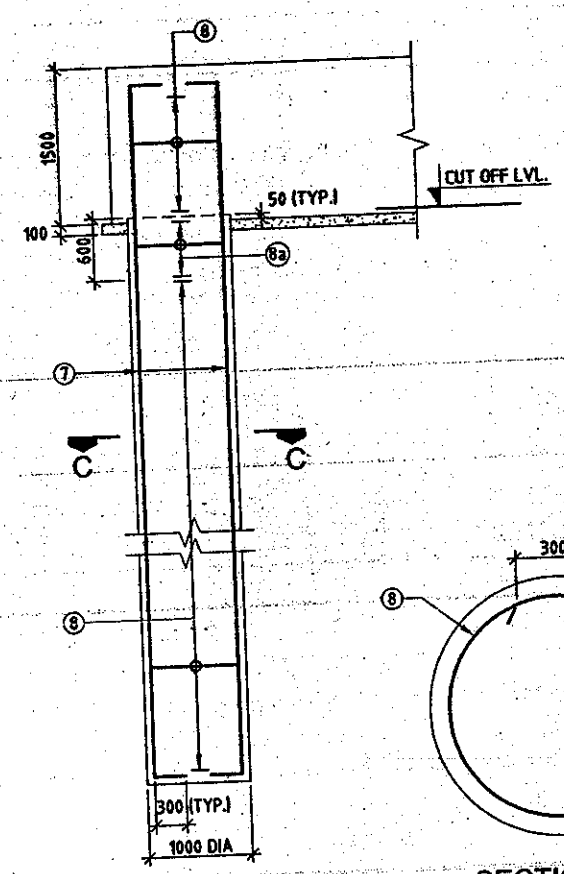

R.C.C. DETAILS OF PILE
(SCALE 1:50)

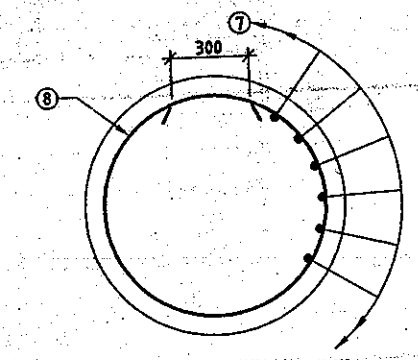

SECTION C-C
(SCALE 1:20)

NOTES:

1. ALL DIMENSIONS ARE IN mm AND LEVELS IN METRES, UNLESS OTHERWISE MENTIONED. ONLY WRITTEN DIMENSIONS ARE TO BE FOLLOWED. NO DIMENSION IS TO BE SCALED.
2. CONCRETE SHALL BE DESIGN MIX WITH A MINIMUM 28 DAYS CHARACTERISTIC STRENGTH OF 35Mpa FOR BORED CAST-IN-SITU PILE AND PILE CAP.
3. CLEAR COVER TO SHALL BE AS FOLLOWS.
   (i) FOR PILE -- ----------75mm
   (ii) FOR PILE CAP --------- 75mm
4. TMT HIGH YIELD STRENGTH DEFORMED BARS SHALL BE OF GRADE DESIGNATION Fe-415 CONFORMING TO IS:1786 SHALL ONLY BE USED.
5. MINIMUM BOND LENGTH SHALL BE 42 x DIA OF BAR.
6. MINIMUM LAP LENGTH FOR REINFORCEMENT BAR SHALL BE 72 x DIA OF BAR.LAPS SHALL BE STAGGERED AND NOT MORE THAN 50% OF BARS SHALL BE LAPPED AT ANY ONE SECTION.
7. LL REPRESENTS LONGITUDINAL AXIS OF BRIDGE AND TT REPRESENTS TRANSVERSE AXIS OF BRIDGE.
8. ACTUAL LOAD TEST SHALL BE CARRIED OUT ON A TEST PILE AS PER STANDARD SPECIFICATIONS TO DETERMINE VERTICAL AND LATERAL CAPACITY OF PILE. IT SHALL HOWEVER BE ENSURED THAT IT IS NOT LESS THAN DESIGN VALUES.

REFERENCE DRAWINGS:-

i) 1213/SMEC/LUDHIANA/21+100/G-01 (SHEET 1 OF 7 TO 7 OF 7)
ii) 1213/SMEC/LUDHIANA/21+100/E-04 (SHEET 2 OF 2)

REINFORCEMENT DETAIL:

BAR MKD.	DIA (mm)	SPACING/Nos.	SHAPE
1	25	27 Nos.	
2	16	150	
3	16	150	
4	25	38 Nos.	
5	16	8 Nos.	
7	25	15 Nos.	
8	10	200	
8a	10	100	
9	16	150	4 LEGGED

LEGENDS:
— — — BAR ON TOP FACE
BAR ON BOTTOM FACE

APPROVED FOR EXECUTION
ISSUED

Assistant Engineer Design (IP)	Executive Engineer Design (P2)	Chief Engineer (IP)
2/3/10	2/3/10	

PUNJAB P.W.D. (B & R)

THIS DRAWING HAS NOT BEEN PUBLISHED AND IS THE SOLE PROPERTY OF SMEC INDIA PVT. LTD. AND IS ISSUED TO THE PARTY FOR THE SPECIFIC PURPOSE AS STATED IN THE AGREEMENT AND IT SHALL NOT BE REPRODUCED, COPIED LENT OR OTHERWISE DISPOSED OFF DIRECTLY OR INDIRECTLY, NOR USED FOR ANY OTHER PURPOSE OTHER THAN FOR WHICH IT IS FURNISHED.

CLIENT : PIDB PUNJAB INFRASTRUCTURE DEVELOPMENT BOARD

CONSULTANT : SMEC INDIA
SMEC (India) Pvt. Ltd.
DLF BUILDING No 8, C TOWER, 5th FLOOR, CYBER CITY, PHASE-II,GURGAON, HARYANA, INDIA -122 002
Tel : 0124-4380042, 4501100

PROJECT TITLE : PREPARATION OF DETAILED PROJECT REPORT FOR UPGRADATION OF SOUTHERN BYE-PASS LUDHIANA

REV	DATE	DRAWN	DESIGN	CHECKED	APPROVED	DETAILS OF REVISION
R1	27/08/2009	MKS	VNM	VNM	S LAHIRI	REVISED AS PER PB.PWD COMMENTS
R0	26/05/2009	MKS	VNM	VNM	S LAHIRI	FIRST ISSUE

SCALE: AS SHOWN
SHEET SIZE: A2

DETAILED PROJECT REPORT
DIMENSIONAL & REINFT. DETAILS OF PILE, PILE CAP, PIER & PIER CAP
(SHEET 1 OF 2)

DPR	DRW	1213/SMEC/LUDHIANA/21+100/E-04	R1

CAD File Ref: H:\Structure\1213\FINAL DPR\Revised Drawings R2 (Feb 10)\Bridge CH. 21+100\ROB CH.21+100 E-04.dwg

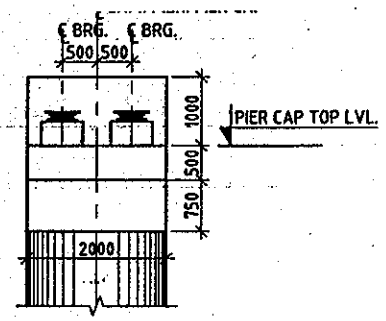

ELEVATION ALONG L-L AXIS
(SHOWING PIER DIMENSIONS)
(SCALE 1:75)

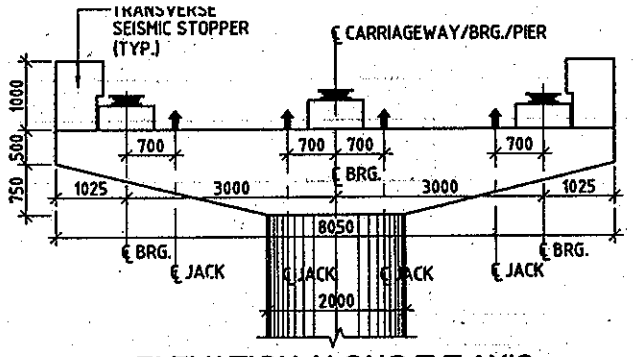

ELEVATION ALONG T-T AXIS
(SHOWING PIER DIMENSIONS)
(SCALE 1:75)

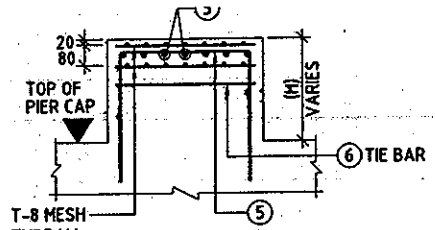

SECTION G-G
HEIGHT OF PEDESTAL (H)
(SCALE 1:20)

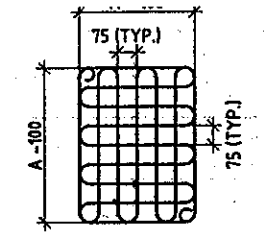

T-8 MESH REINF. TYPE - 'A'
(UNDER BEARING)
(SCALE 1:20)

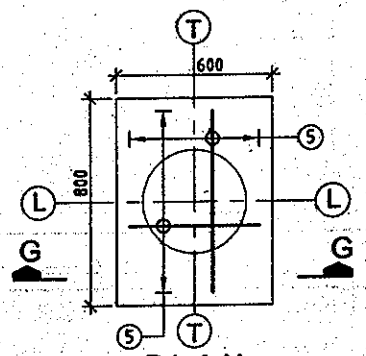

PLAN
(DETAILS OF PEDESTAL)
(SCALE 1:20)

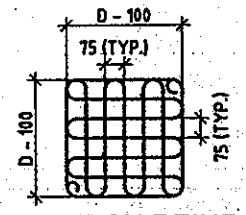

T-8 MESH REINF. TYPE - 'B'
(UNDER JACK)
(SCALE 1:20)

1. ALL DIMENSIONS ARE IN mm AND LEVELS IN METRES, UNLESS OTHERWISE MENTIONED. ONLY WRITTEN DIMENSIONS ARE TO BE FOLLOWED. NO DIMENSION IS TO BE SCALED.
2. CONCRETE SHALL BE DESIGN MIX WITH A MINIMUM 28 DAYS CHARACTERISTIC STRENGTH 150mm CUBES AS FOLLOWS:-
   PIER ----------M35
   PIER CAP ----------M35
3. CLEAR COVER TO OUTER MOST STEEL SHALL BE AS FOLLOWS.
   (i) FOR SUBSTRUCTURE ------- 50mm
   (ii) FOR FOUNDATION --------- 75mm
4. TMT HIGH YIELD STRENGTH DEFORMED BARS SHALL BE OF GRADE DESIGNATION Fe-415 CONFORMING TO IS:1786 SHALL ONLY BE USED.
5. MINIMUM BOND LENGTH SHALL BE 42 x DIA OF BAR.
6. MINIMUM LAP LENGTH FOR REINFORCEMENT BAR SHALL BE 72 x DIA OF BAR. LAPS SHALL BE STAGGERED AND NOT MORE THAN 50% OF BARS SHALL BE LAPPED AT ANY ONE SECTION.
7. IN PIER SHAFT T-10 OPEN LINKS (OR S LOOPS) WITH HOOK PLACED AROUND THE VERTICAL BARS ARE PLACED AT THE RATE OF 4 LINKS IN ONE SQUARE METER.
8. LL REPRESENTS LONGITUDINAL AXIS OF BRIDGE AND TT REPRESENTS TRANSVERSE AXIS OF BRIDGE.
9. A IS THE DIMENSIONS OF THE BEARINGS WHICH IS TO BE FURNISHED BY THE MANUFACTURER.
10. D = DIA OF JACK.

REFERENCE DRAWINGS:-
i) 1213/SMEC/LUDHIANA/21+100/G-01 (SHEET 1 OF 7 TO 7 OF 7)
ii) 1213/SMEC/LUDHIANA/21+100/E-04 (SHEET 1 OF 2)

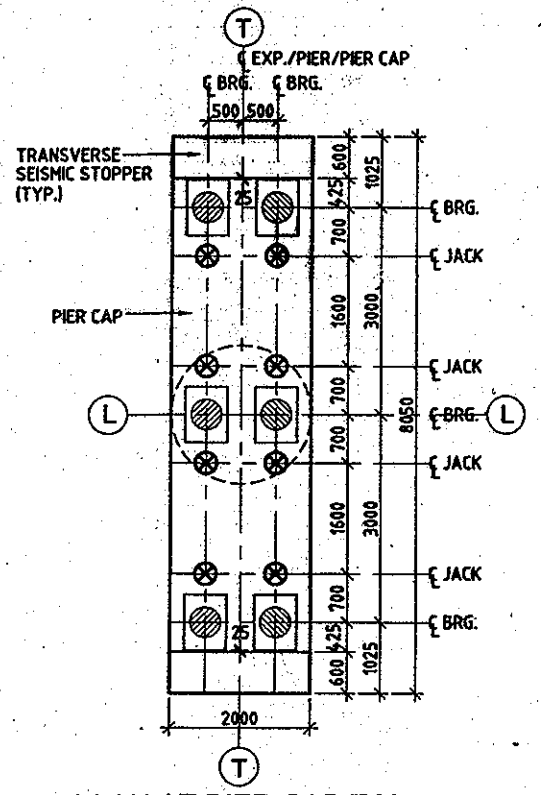

PLAN AT PIER CAP TOP
(SHOWING DIMENSIONS)
(SCALE 1:75)

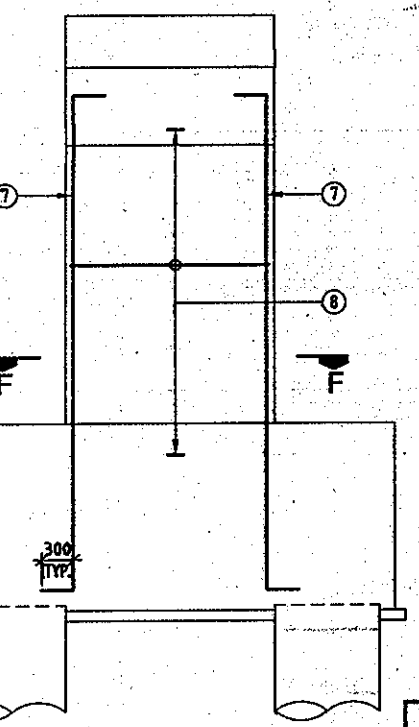

ELEVATION ALONG L-L AXIS
(SHOWING PIER REINFORCEMENT)
(SCALE 1:50)

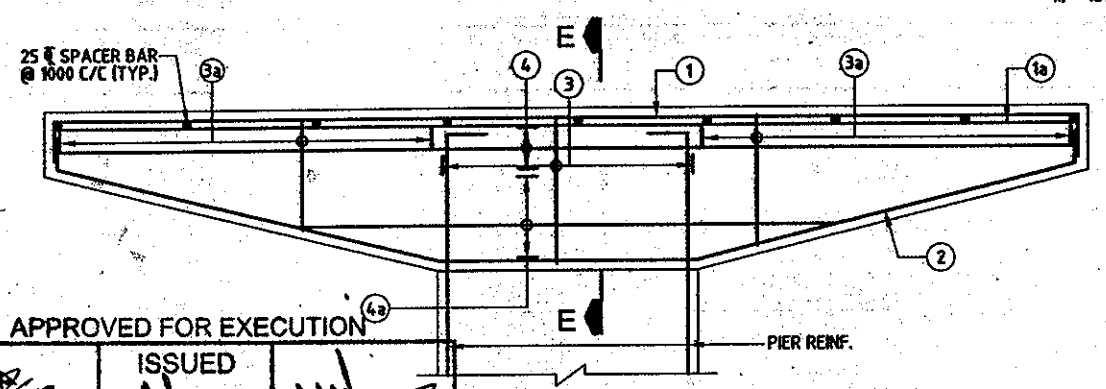

SECTION D-D
(SCALE 1:40)

APPROVED FOR EXECUTION

Assistant Engineer Design (IP)	Executive Engineer Design (IP)	Chief Engineer (IP)
	ISSUED	

PUNJAB P.W.D. (B & R)

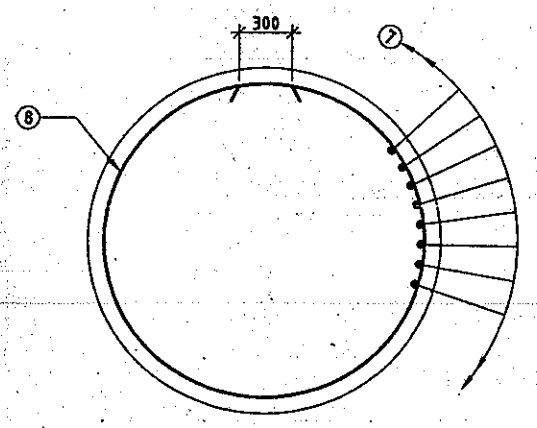

SECTION F-F
(SCALE 1:30)

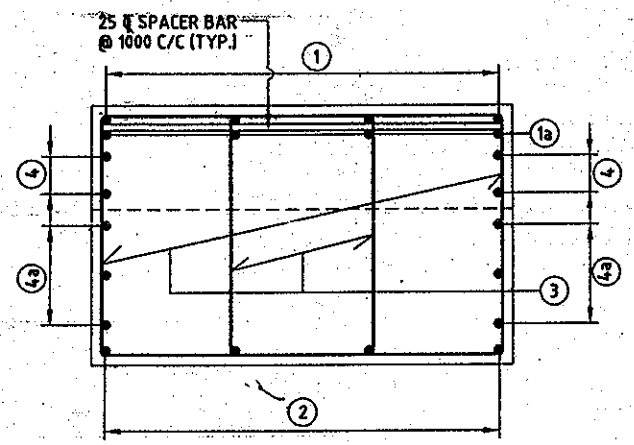

SECTION E-E
(SCALE 1:25)

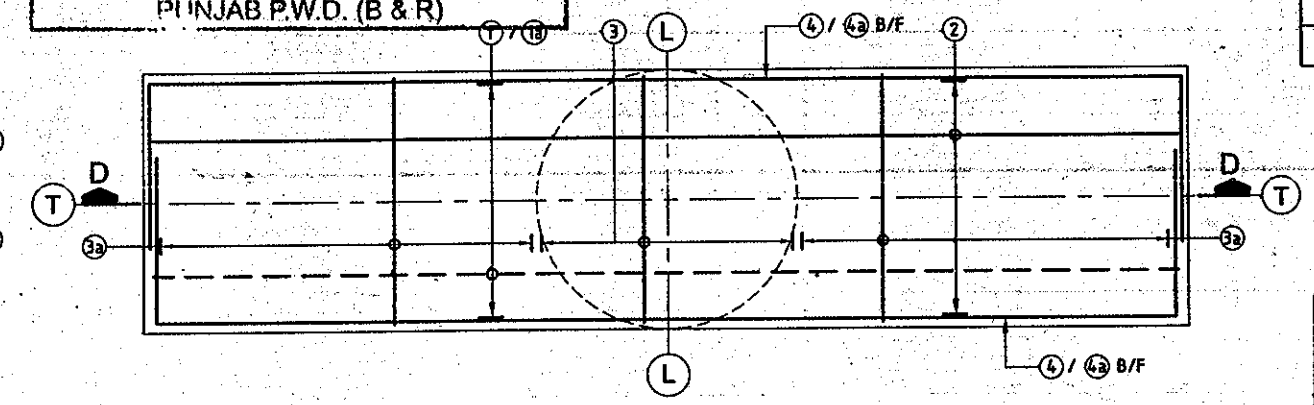

PLAN SHOWING REINFORCEMENT IN PIER CAP
(SCALE 1:40)

REINFORCEMENT DETAIL:

BAR MKD.	DIA (mm)	SPACING/Nos.	SHAPE
1	32	16 Nos.	
1a	32	16 Nos.	
2	16	27 Nos.	
3	16	150	
3a	16	150	9 LEGGED
4	12	2Nos.	
4a	12	3Nos.	
5	12	75	
6	12	150	
7	25	64 Nos.	
8	12	125	

LEGENDS:
- — — — BAR ON TOP FACE
- ——— BAR ON BOTTOM FACE

LEVELS CHART FOR PIER

PIER DESIGNATION	FORMATION LEVELS	PIER CAP TOP LEVELS	BED LEVELS
P4	254.090	251.675	246.774
P11	256.620	254.205	246.671
P15	254.090	251.675	246.571

THIS DRAWING HAS NOT BEEN PUBLISHED AND IS THE SOLE PROPERTY OF SMEC INDIA PVT. LTD. AND IS ISSUED TO THE PARTY FOR THE SPECIFIC PURPOSE AS STATED IN THE AGREEMENT AND IT SHALL NOT BE REPRODUCED, COPIED LENT OR OTHERWISE DISPOSED OFF DIRECTLY OR INDIRECTLY, NOR USED FOR ANY OTHER PURPOSE OTHER THAN FOR WHICH IT IS FURNISHED.

CLIENT: PIDB PUNJAB INFRASTRUCTURE DEVELOPMENT BOARD

CONSULTANT: SMEC (India) Pvt. Ltd. DLF BUILDING No 8, C TOWER, 5th FLOOR, CYBER CITY, PHASE-II,GURGAON, HARYANA, INDIA -122 002 Tel : 0124-4380042, 4501100

PROJECT TITLE: PREPARATION OF DETAILED PROJECT REPORT FOR UPGRADATION OF SOUTHERN BYE-PASS LUDHIANA

REV	DATE	DRAWN	DESIGN	CHECKED	APPROVED	DETAILS OF REVISION
R0	26/05/2009	MKS	VNM	VNM	S LAHIRI	FIRST ISSUE

SCALE: AS SHOWN
SHEET SIZE: A2

DETAILED PROJECT REPORT
DIMENSIONAL & REINFT. DETAILS OF PILE, PILE CAP, PIER & PIER CAP
(SHEET 2 OF 2)

DPR: DRW: 1213/SMEC/LUDHIANA/21+100/E-04 R0

CAD File Ref: H:\Structure\1213\FINAL DPR\Revised Drawings R2 (Feb 10)\Bridge CH. 21+100\ROB CH.21+100 E-04.dwg