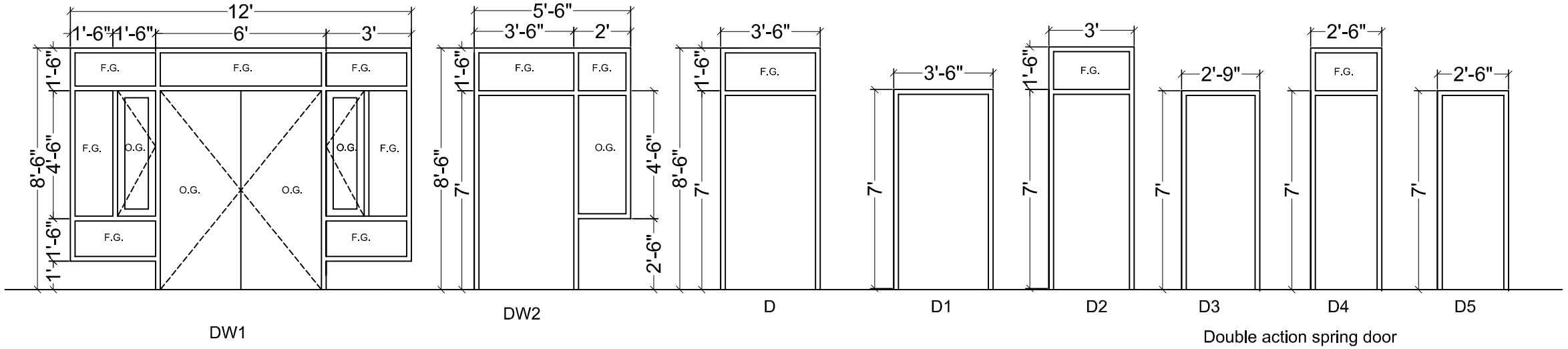

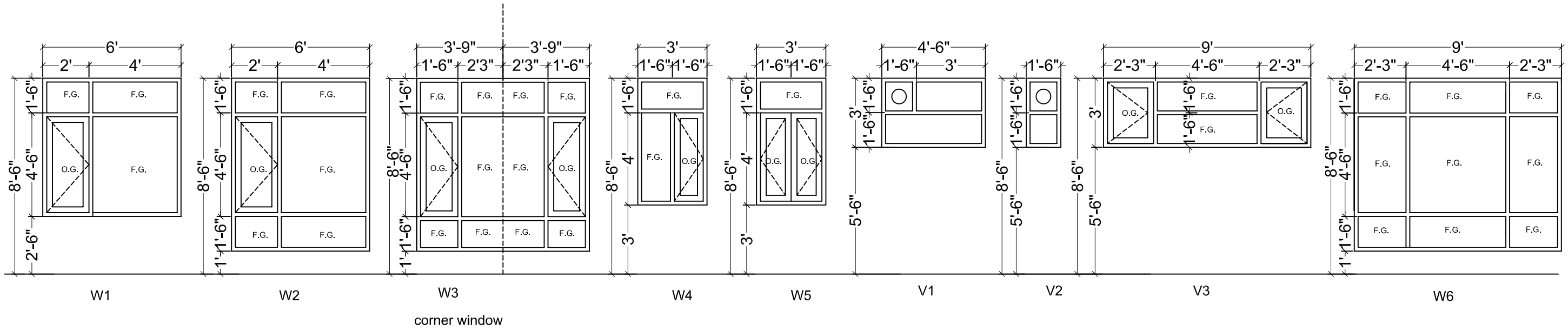

OG FOR OPENABLE GLASS SHUTTER
FG FOR FIXED GLASS SHUTTER

JOINERY DETAILS OF GUEST HOUSE IN BEANT COLLEGE OF ENGG. & TECH. AT GURDASPUR.

DESIGNED FOR:- BEANT COLLEGE OF ENGG & TECH. .

DESIGNED BY:-

Dr. Harvinder Singh | Dr. Hardeep Singh Rai | Ar. Jaspal Kaur

ENDORSED BY:-

TESTING AND CONSULTANCY CELL GURU NANAK DEV ENGG. COLLEGE, LUDHIANA

SHEET NO. -06 | **REF. NO:- TCC/894** | 24-03-15