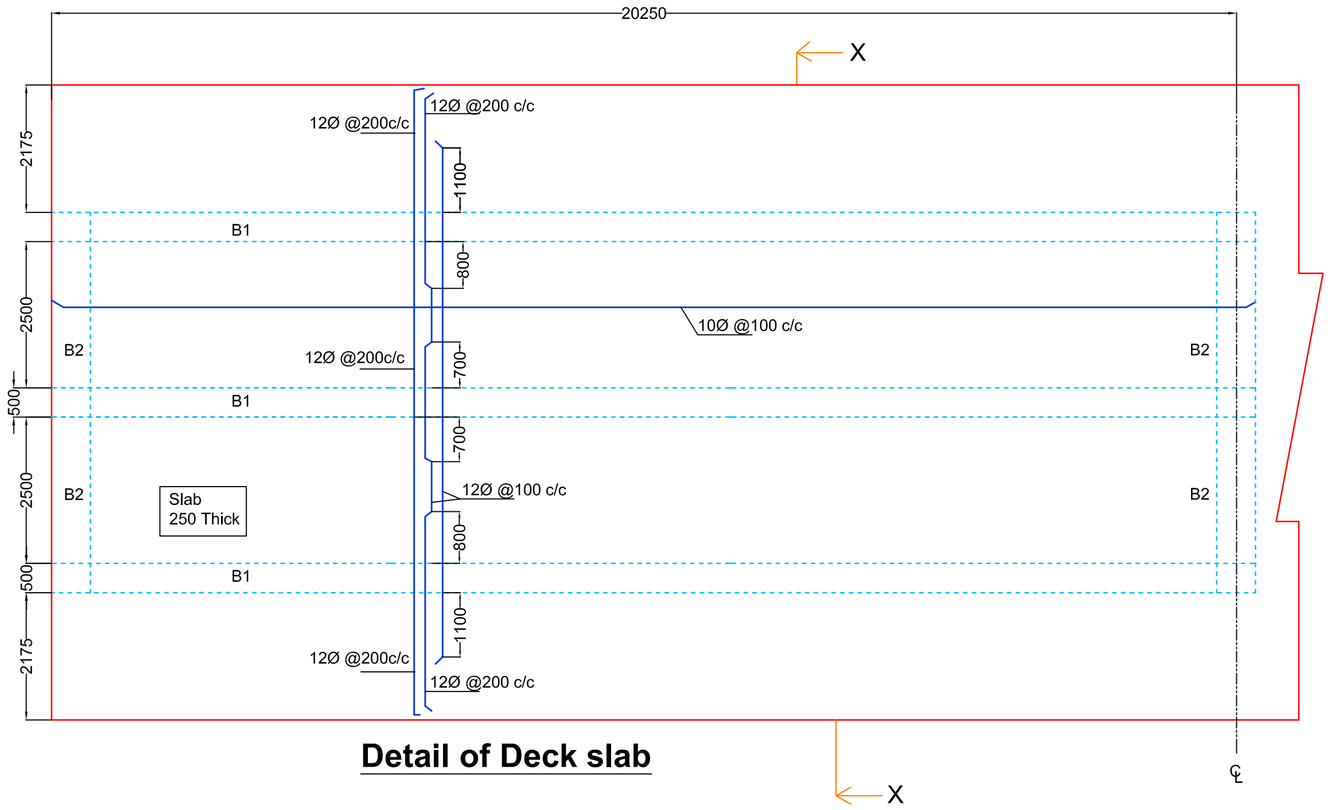

Detail of Deck slab

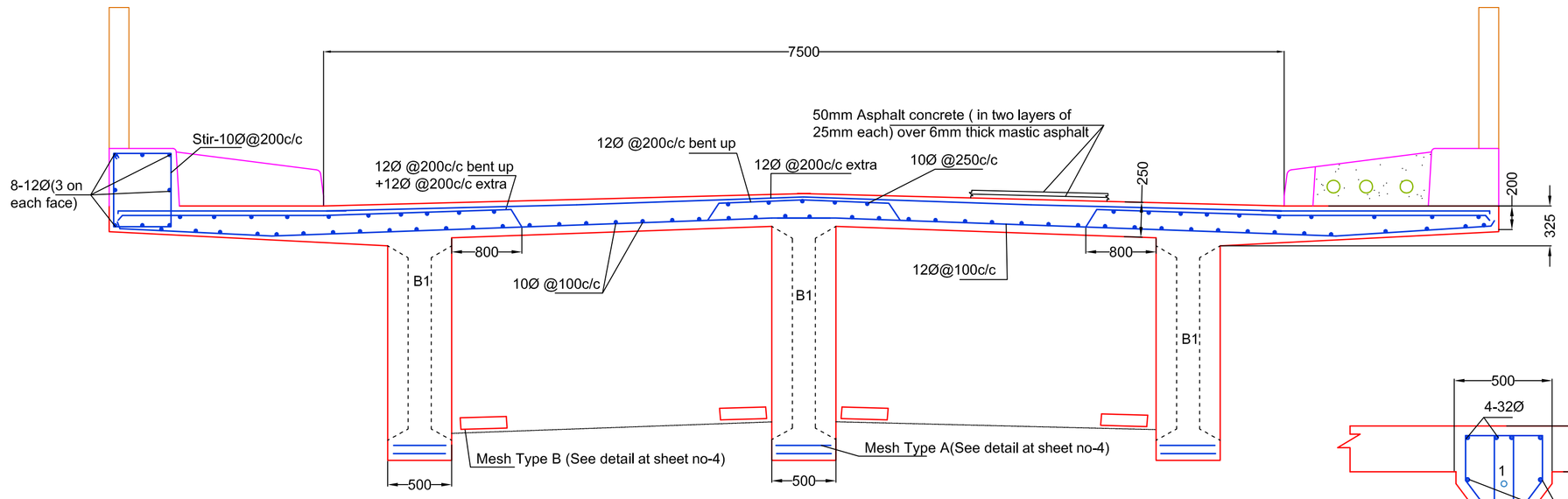

Section Detail at X-X

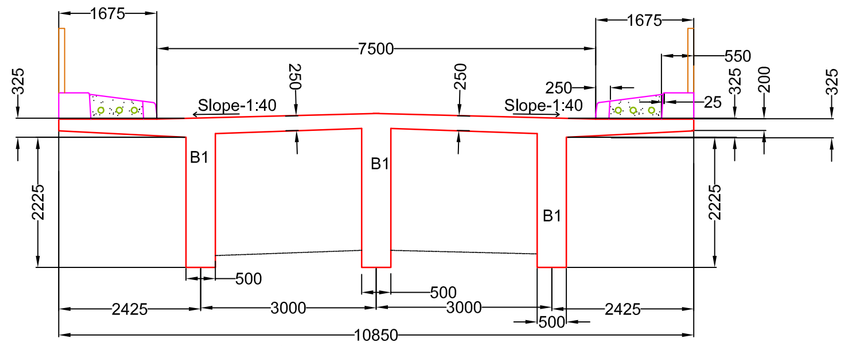

Section at X-X

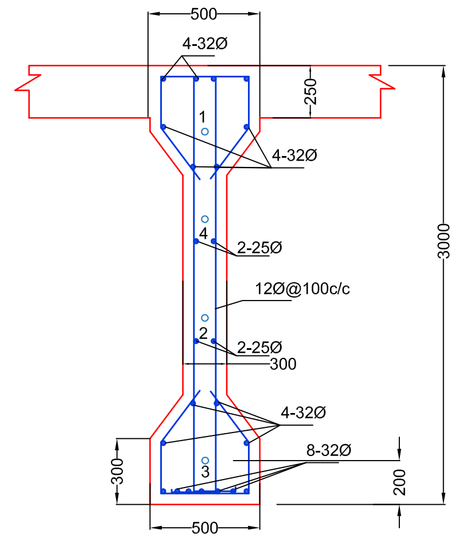

Section at Q

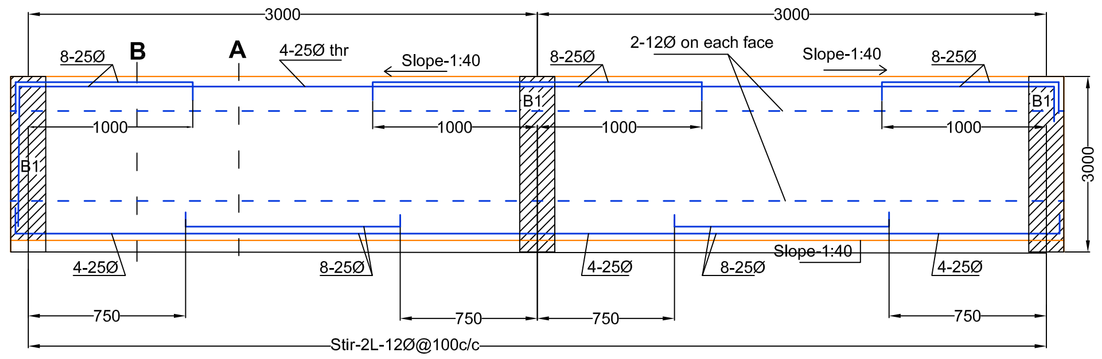

L- Section of Girder-B2

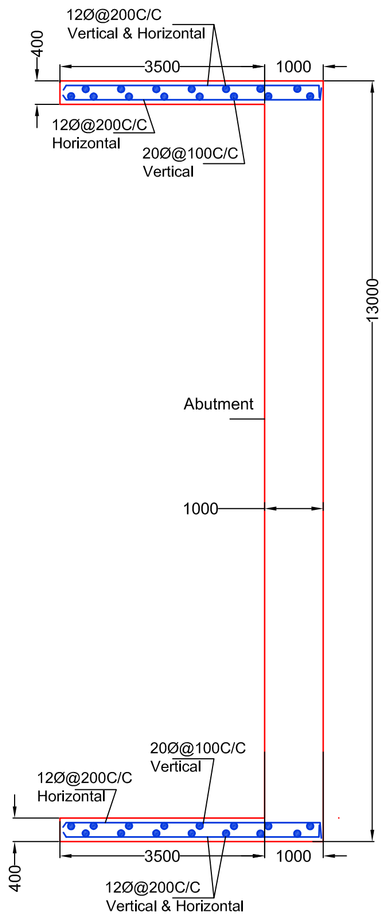

DETAIL OF RETURN WALL

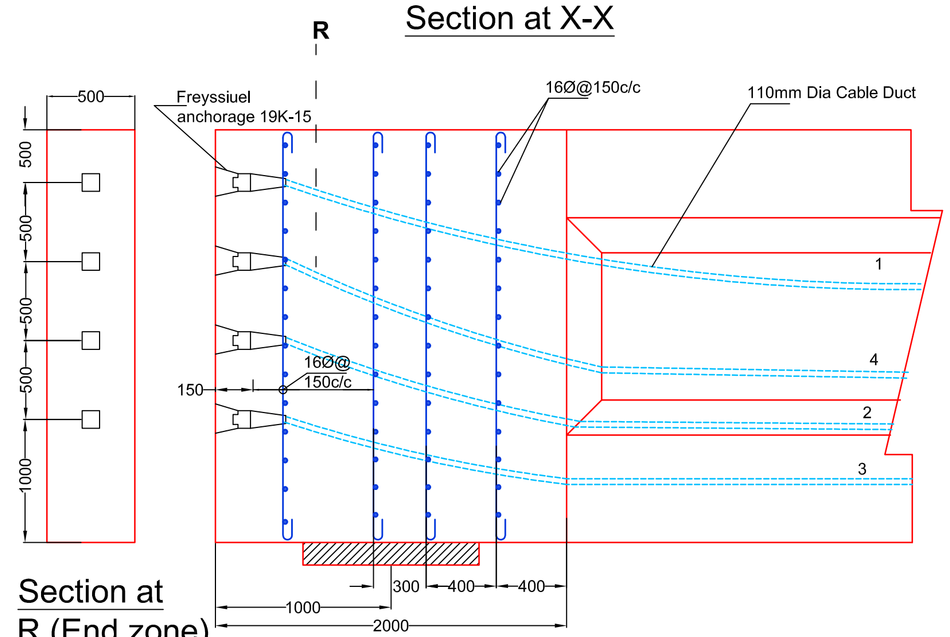

Section at R (End zone)

Anchorage Zone Reinforcement in End Block

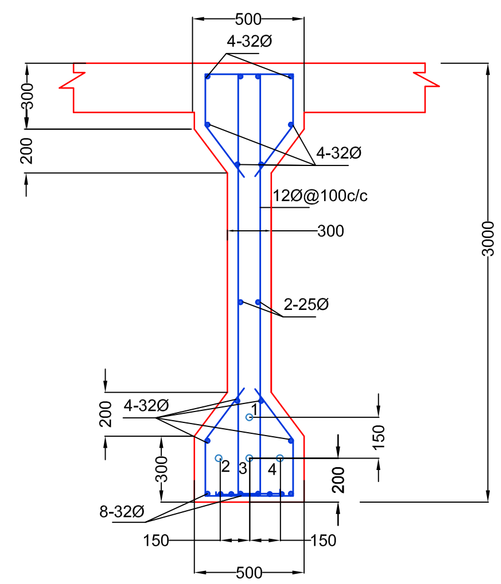

Section at P

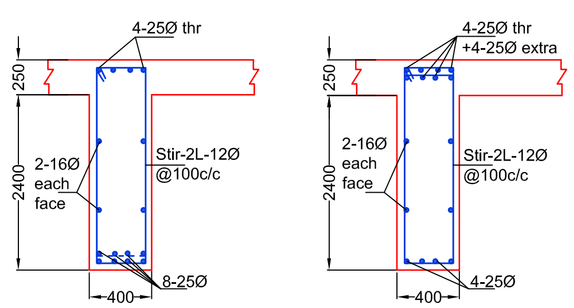

X- Section of B2 at A

X- Section of B2 at B

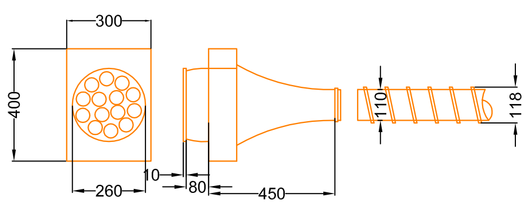

Detail of Freyssinet system anchorage 27K-15 in 110mm cable

NOTE:-

1. Deck is cast in Situ post tensioned girder system.
2. Use Freyssinet system anchorage 27K-15 (27 Strands of 15mm diameter) in 110mm cable duct.
3. M-30 concrete to be used for throughout except beams only.
4. M-60 concrete to be used for post tensioned beams.
5. Steel Fe-500D as per IS-1786
6. Post tensioned strands as per IS: 6006-1983.
7. Total Post tensioned force is 12100kN (3x4035kN) i:e cable 1,2 and 4 will be 4035kN each. The profile is parabola.
8. Cable 3 is to be stretched only when any of the cable fail.
9. Cable should be tensioned after 28 days of casting in the sequence 4, 2,1.
10. Grouting should be done in each cable with cement grout (with minimum cube strength of 17 MPa).

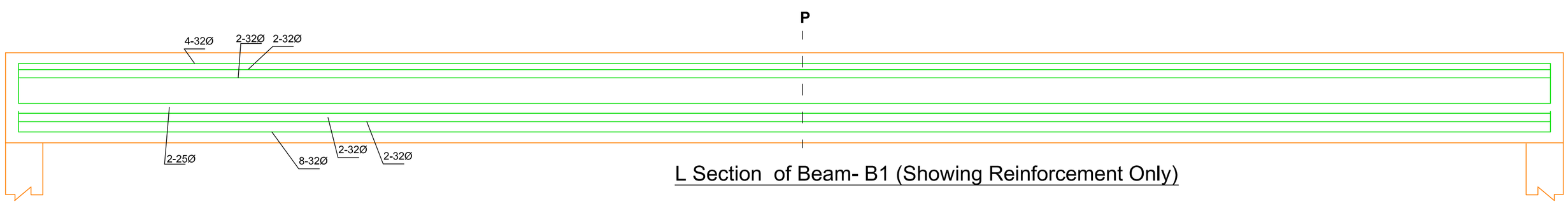

L Section of Beam- B1 (Showing Reinforcement Only)

STRUCTURAL DETAIL OF DECK SLAB AND BEAMS OF BRIDGE ACROSS **KHADI KHAD JOINING THE FLORENCE CITY, PATHANKOT.**

DESIGNED FOR:- **ANSAL, BUILDWELL LTD, PATHANKOT.**

DESIGNED BY:-

Dr. H.S.Rai Dr. Harpal Singh

ENDORSED BY:-

TESTING AND CONSULTANCY CELL GURU NANAK DEV ENGG. COLLEGE, LUDHIANA

SHEET NO-R3 | **REF. NO:- TCC/HSR/HVS/YS/1028** | 08-10-2015